Logic No.	Description	Part No.	EC No.
SLT Boards			
AA1	Customized Board	2510234	731505

Table of Contents - Vol. 1 for 9004SJ2 00004 Mode

Logic No.	Description	Part No.	EC No.
System Diagrams			
SA005	Socket Listing	2196755	731506
SA011	Block Diagram	2196960	414258
SA012	Perspective Diagram	2196961	258899
SA021	Plugging Chart	2196962	258899
SA022	Adjustment Procedure	2196975	258899
SA031	Timing and Wave Forms	2196963	258899
SA041	8-K Array Addressing	2196964	414258
SA042	4-K Array Addressing	2196965	414258
SA043	Read/Write Schematic	2196966	731506
SA051	Inhibit Sense	2196967	731506
SA061	8-K Sense Connections	2196968	258899
SA062	4-K Sense Connections	2196969	258899
SA071	8K Bottom Board Schematic *2 pages	2196970	731675
SA072	4K Bottom Board Schematic *2 pages	2196971	731675
SA081	8K Diode Board Schematic *2 pages	2196972	731675
SA082	4K Diode Board Schematic *2 pages	2196973	731675

Logic No.	Description	Part No.	EC No.
SA111	Time Entr and Capacity Select	2196725	258899
SA121	Address Register Entry	2510237	731505
SA131	Data Bit Entry	2510238	731505
SA211	Inhibit Voltage Distribution	2196728	731506
SA221	Voltage Distribution	2196732	731506
SA311	Timing	2196729	731506
SA321	Address Register Inversion	2196730	414258
SA411	Current Source and Sink	2196731	731506
SA421	Y Half Low Order Driver	2196733	730246
SA426	Y Half Low Order Driver	2196734	730246
SA431	Y Half Low Order Driver	2196735	730246
SA436	Y Half Low Order Driver	2196736	730246
SA441	Y Half High Order Driver	2196737	414258
SA446	Y Half High Order Driver	2196738	414258
SA451	X Half Low Order Driver	2196739	730246
SA456	X Half Low Order Driver	2196740	730246
SA461	X Half Low Order Driver	2196741	414258
SA466	X Half Low Order Driver	2196742	731506
SA511	Sense Controls Inhibit Timing	2196743	731506
SA521	Inhibit Invtrs Bits 0-8 4K	2196744	256308
SA526	Inhibit Invtrs Bits 9-17 J5	2196745	256308
SA531	Inhibit Invtrs Bits 0-8 8K	2196746	256308
SA536	Inhibit Invtrs Bits 9-17 8K	2196747	256308
SA541	Inhibit Sense Bits 0-1-2	2196748	731506
SA546	Inhibit Sense Bits 3-4-5	2196749	731506
SA551	Inhibit Sense Bits 6-7-8	2196750	731506
SA556	Inhibit Sense Bits 9-10-11	2196751	731506
SA561	Inhibit Sense Bits 12-13-14	2196752	731506
SA566	Inhibit Sense Bits 15-16-17	2510236	731505

A1 CONNECTOR
A09 SA131AQ4
A11 SA546BQ4

A2 SINGLE CARD 8K
5803803 3803
SA531 A1 A2 A3 A4 A5 A6
A7 A8 A9 AA AB

A3 SINGLE CARD
8205 8K
SA551 A1
SA556 A2
SA551 A4
SA556 A5
SA551 A6
SA556 A7

A4 SINGLE CARD
8205 8K
SA541 A1
SA546 A2
SA541 A4
SA546 A5
SA541 A6
SA546 A7

A5 SINGLE CARD
8205 8K
SA546 A1
SA541 A2
SA546 A4
SA541 A5
SA546 A6
SA541 A7

A6 SINGLE CARD
8205 8K
SA546 A1
SA551 A2
SA546 A4
SA551 A5
SA546 A6
SA551 A7

A7 SINGLE CARD
8205 8K
SA551 A1
SA541 A2
SA551 A4
SA541 A5
SA551 A6
SA541 A7

B1 CONNECTOR
A09 SA131AA4
A11 SA541BA4
B09 SA131AB4
B11 SA541BB4
C09 SA131AC4
C11 SA541BC4
D09 SA131AD4
D11 SA546BA4
E09 SA131AF4
E11 SA546EB4

B2 SINGLE CARD
5803803 3803
SA521 A1 A2 A3 A4 A5 A6
A7 A8 A9 AA AB

B3 SINGLE CARD
8205
SA551 A1
SA556 A2
SA551 A4
SA556 A5
SA551 A6
SA556 A7

B4 SINGLE CARD
8205
SA541 A1
SA546 A2
SA541 A4
SA546 A5
SA541 A6
SA546 A7

B5 SINGLE CARD
8205
SA546 A1
SA541 A2
SA546 A4
SA541 A5
SA546 A6
SA541 A7

B6 SINGLE CARD
8205
SA546 A1
SA551 A2
SA546 A4
SA551 A5
SA546 A6
SA551 A7

B7 SINGLE CARD
8205
SA551 A1
SA541 A2
SA551 A4
SA541 A5
SA551 A6
SA541 A7

C1 CONNECTOR
A11 SA551BB4
B09 SA131AF4
B11 SA546EC4
C09 SA131AG4
C11 SA551BA4
D09 SA131AH4
D11 SA551BB4
E09 SA131AJ4
E11 SA551EC4

C3 SINGLE CARD
5803802 3802
SA436 A1 A2 A3 A4 A5 A6
A7 A8 A9 AA AB AC

D1 CONNECTOR
A09 SA131AK4
A11 SA556B84
E09 SA121AN4
E11 SA111AB4

D2 SINGLE CARD
5803801 3801
SA511 A1 A3 A4 A5 A6 A7
SA321 A8
SA511 A9 AA
SA111 E1
UNUSED PORTIONS
B C D

D3 SINGLE CARD
5803802 3802
SA431 A1 A2 A3 A4 A5 A6
A7 A8 A9 AA AB AC

D5 SINGLE CARD
CORE
SA466

D6 SINGLE CARD
CORE
SA466

D7 SINGLE CARD
CORE
SA541

E1 CONNECTOR
A09 SA121AN4
A11 SA111AX4
B09 SA121AL4
B11 SA121AM4
C09 SA121AJ4
C11 SA121AK4
D09 SA111AE4
D11 SA111AB4
E09 SA111A84
E11 SA111AA4

E2 SINGLE CARD
5803772 3772
SA511 A1
SA321 B1 C1 D1 F1 F1 G1

F3 SINGLE CARD
5803802 3802
SA426 A1 A2 A3 A4 A5 A6
A7 A8 A9 AA AB AC

E5 SINGLE CARD
CORE
SA546

E6 SINGLE CARD
CORE
SA466

E7 SINGLE CARD
CORE
SA546

F1 CONNECTOR
A11 SA121AF4
B09 SA111AC4
B11 SA1118C4
C09 SA121AG4
C11 SA121AH4
D09 SA121AE4
D11 SA121AF4
E09 SA121AC4
E11 SA121AD4

F2 SINGLE CARD
8204
SA511 A1 A2 A3 A4
SA466 B1 B2 B3

F3 SINGLE CARD
5803802 3802
SA421 A1 A2 A3 A4 A5 A6
A7 A8 A9 AA AB AC

F4 SINGLE CARD
CORE
SA556

F5 SINGLE CARD
CORE
SA546

F7 SINGLE CARD
CORE
SA551

G1 CONNECTOR
A09 SA121AA4
A11 SA121AB4
E09 SA121AN4
E11 SA111A84

G2 SINGLE CARD
5803783 3783
SA111 A1
SA411 A2
SA111 A3
SA411 B1
SA321 C1 D1 E1 F1 G1 H1
UNUSED PORTIONS
J

G3 SINGLE CARD
5803802 3802
SA446 A1 A2 A3 A4 A5 A6
A7 A8 A9 AA AB AC

H1 CONNECTOR
A09 SA121AN4
A11 SA111AX4
B09 SA121AL4
B11 SA121AM4
C09 SA121AJ4
C11 SA121AK4
D09 SA111AE4
D11 SA111AB4
E09 SA111A84
E11 SA111AA4

H2 SINGLE CARD
8196
SA411 A1 A2

H3 SINGLE CARD
5803802 3802
SA441 A1 A2 A3 A4 A5 A6
A7 A8 A9 AA AB AC

H4 SINGLE CARD
CORE
SA556

H5 SINGLE CARD
CORE
SA566

H7 SINGLE CARD
CORE
SA556

J1 CONNECTOR
A11 SA121AF4
B09 SA111AC4
B11 SA111EC4
C09 SA121AG4
C11 SA121AH4
D09 SA121AE4
D11 SA121AF4
E09 SA121AC4
E11 SA121AD4

J2 SINGLE CARD
8196
SA411 A1 A2

J3 SINGLE CARD 8K
5803802 3802
SA466 A1 A2 A3 A4 A5 A6
A7 A8 A9 AA AB AC

J5 SINGLE CARD
CORE
SA566

J6 SINGLE CARD
CORE
SA461

J7 SINGLE CARD
CORE
SA561

K1 CONNECTOR
A09 SA121AA4
A11 SA121AB4
E09 SA131AL4
E11 SA561B84

K2 SINGLE CARD
5803768 3768
SA411 A1 A2 A3 A4
SA311 A5 A6 A7
SA411 B1

K3 SINGLE CARD
5803802 3802
SA461 A1 A2 A3 A4 A5 A6
A7 A8 A9 AA AB AC

K5 SINGLE CARD
CORE
SA461

K6 SINGLE CARD
CORE
SA466

K7 SINGLE CARD
CORE
SA566

L1 CONNECTOR
A09 SA131AL4
A11 SA556B84
B09 SA131AM4
B11 SA556BC4
C09 SA131AN4
C11 SA561BA4
D09 SA131AP4
D11 SA561BB4
E09 SA131AQ4
E11 SA561BC4

L2 SINGLE CARD
5803803 3803
SA526 A1 A2 A3 A4 A5 A6
A7 A8 A9 AA AB

L3 SINGLE CARD
5803602 3802
SA456 A1 A2 A3 A4 A5 A6
A7 A8 A9 AA A8 AC

M1 CONNECTOR
A11 SA566BC4
B09 SA131AR4
B11 SA566B84
C09 SA131AS4
C11 SA566B84
D09 SA131AT4
D11 SA566BC4
E09 SA111AG4
E11 SA111AF4

M2 SINGLE CARD BK
5803803 3803
SA536 A1 A2 A3 A4 A5 A6
A7 A8 A9 AA A8

M3 SINGLE CARD
5803802 3802
SA451 A1 A2 A3 A4 A5 A6
A7 A8 A9 AA A8 AC

M4 SINGLE CARD
8205
SA556 A1
SA566 A2
SA556 A4
SA566 A5
SA556 A6
SA566 A7

M5 SINGLE CARD
8205
SA566 A1
SA561 A2
SA566 A4
SA561 A5
SA566 A6
SA561 A7

M6 SINGLE CARD
8205
SA556 A1
SA561 A2
SA556 A4
SA561 A5
SA536 A6
SA561 A7

M7 SINGLE CARD
8205
SA561 A1
SA566 A2
SA561 A4
SA566 A5
SA561 A6
SA566 A7

N1 CONNECTOR
A09 SA111AJ4
A11 SA111AH4

N2 DOUBLE CARD
5806206 6206
SA311 A1 A2 A3 A4 A5 A6
A7 A8 A9 AA AB AC
AD AE AF AG AH AJ
B1 B2

N4 SINGLE CARD
8205 8K
SA556 A1
SA566 A2
SA556 A4
SA566 A5
SA556 A6
SA566 A7

N5 SINGLE CARD
8205 8K
SA566 A1
SA561 A2
SA566 A4
SA561 A5
SA566 A6
SA561 A7

N6 SINGLE CARD
8205 8K
SA556 A1
SA561 A2
SA556 A4
SA561 A5
SA556 A6
SA561 A7

N7 SINGLE CARD
8205 8K
SA561 A1
SA566 A2
SA561 A4
SA566 A5
SA561 A6
SA566 A7

PLUG LIST

PART NO	ACC	TYPE	SOCKETS		TOTAL
5803768		3768	K2		01
5803772		3772	F2		01
5803783		3783	G2		01
5803801		3801	D2		01
5803802		3802	C3 D3 F3 F3		09
			G3 H3 K3 L3		
			M3		
5803802	8K	3802	J3		01
5803803		3803	B2 L2		02
5803803	6K	3803	A2 F2		02
5806206		6206	N2		01
		8196	H2 J2		02
		8204	F2		01
		8205	B3 B4 B5 B6		09
			B7 M4 M5 M6		
			M7		
		CONN	A1 B1 C1 D1		13
			E1 F1 G1 H1		
			J1 K1 L1 M1		
			N1		
		CORE	D5 D6 D7 E5		18
			E6 E7 F4 F5		
			F7 H4 H5 H7		
			J5 J6 J7 K5		
			K6 K7		
	8K	8205	A3 A4 A5 A6		09
			A7 N4 N5 N6		
			N7		

SOCKET LISTING
DATE 09-05-67 MACH. SJ-2
LOG 248R 80ARD 63Z-21
PREV. ENGR. 12-22-66 730246
PRES. ENGR. 09-05-67 731506
P.N. 2196755
IBM CORP. SDD BLK.

READ CYCLE
WRITE CYCLE
STOR SELECT

CLOCK & TIMING SA311

TIMING PULSES → TO INHIBIT DRIVERS, SENSE AMPLIFIERS AND SENSE CONTROL

CURRENT SOURCE & SINK SA411 → TO GATES & DRIVERS

ARRAY CAPACITIES

4K
MAIN = 4096 - 18 BIT WORDS
AUX = 256 - 18 BIT WORDS

8K
MAIN = 8192 - 18 BIT WORDS
AUX = 512 - 18 BIT WORDS

ADDRESS REG BITS 3 TO 15 & AUX

SJ-2 - CPU INTERFACE

ADDR REG BITS 3, 4, 5, AUX SA121,321

(8) X READ GATES SA461-466

X WRITE DRIVERS SA461-466

X

X

Y

Y

(8) Y READ GATES SA441-446

Y WRITE DRIVERS SA441-446

ADDR REG BITS 9, 10, 11 SA121,321

DIODE BOARD SA081-082

ARRAY SA421-466

AIR FLOW

ADDR REG BITS 12, 13, 14,15 SA121, 321

(16) Y WR GT - RD DR SA421-436

Y

BOTTOM BOARD SA071-072

SENSE CONNECTIONS SA061-062

Z

(8) X WR GT - RD DR SA451-456

X

ADDR REG BITS 6, 7, 8 SA121,321

INHIBIT BIT DATA

INHIBIT DRIVERS SA541-566

SENSE AMPLIFIERS SA541-566

SENSE BIT DATA

DATE	EC NUMBER	DATE	EC NUMBER
19AUG65	414258		

SJ-2 BLOCK DIAGRAM

DATE 19AUG65 P/N 2196960
TYPE

IBM SA011

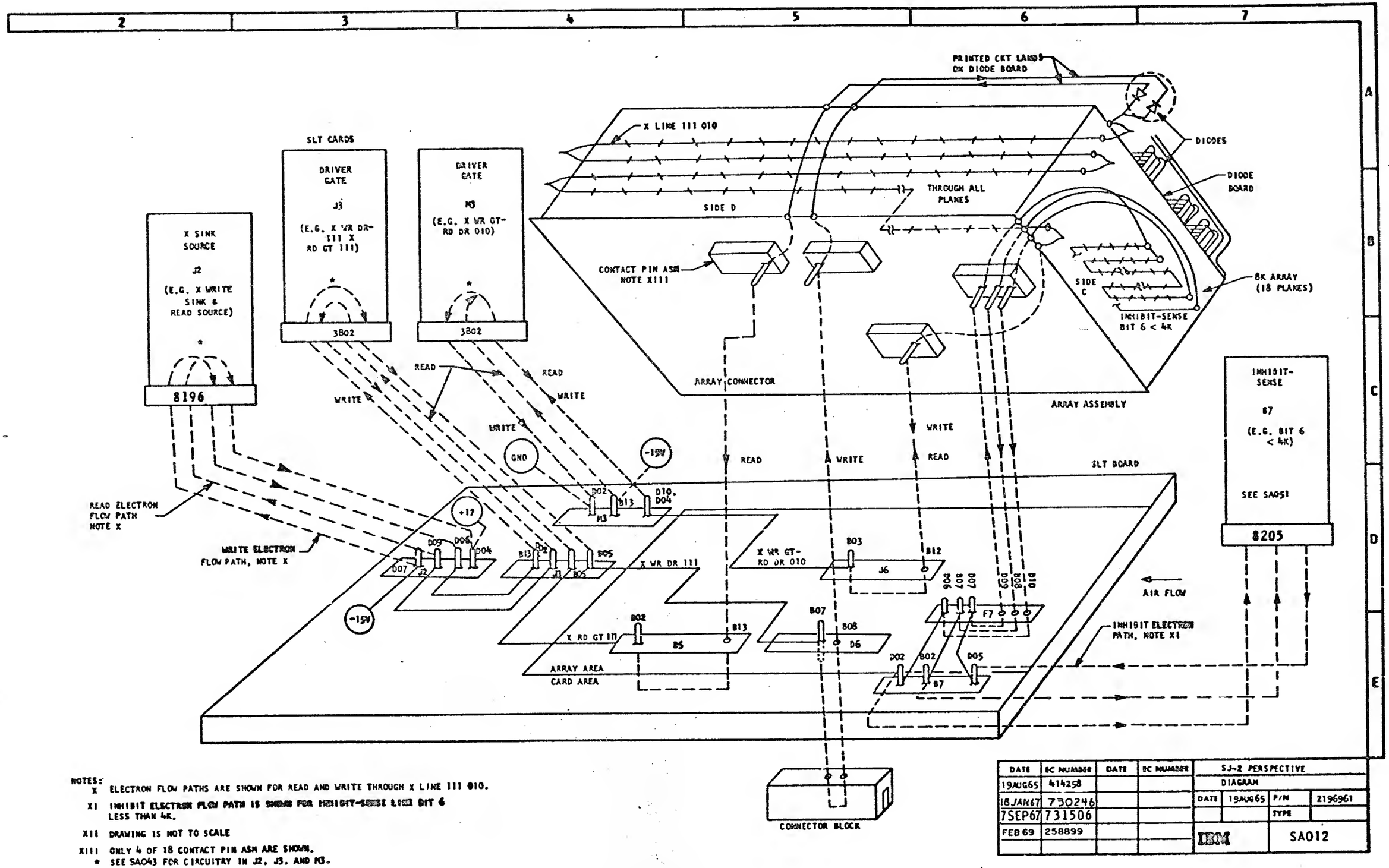

NOTES:

X ELECTRON FLOW PATHS ARE SHOWN FOR READ AND WRITE THROUGH X LINE 111 010.

XI INHIBIT ELECTRON FLOW PATH IS SHOWN FOR INHIBIT-SENSE LINE BIT 6 LESS THAN 4K.

XII DRAWING IS NOT TO SCALE

XIII ONLY 4 OF 18 CONTACT PIN ASM ARE SHOWN.

* SEE SA043 FOR CIRCUITRY IN J2, J3, AND M3.

DATE	EC NUMBER	DATE	EC NUMBER
19AUG65	414258		
18JAN67	730246		
7SEP67	731506		
FEB 69	258899		

SJ-2 PERSPECTIVE DIAGRAM

DATE	19AUG65	P/N	2196961
		TYPE	

IBM SA012

| | | |

SJ-2 STORAGE ADJUSTMENT PROCEDURE

REFER TO WZ001 (IF PROVIDED BY USING SYSTEM) FOR ADDITIONAL INFORMATION BEFORE BEGINNING STORAGE ADJUSTMENTS.

I RECOMMENDED TEST EQUIPMENT

VOLTMETER:	WESTON 901 (1/4 %)
CABLE ASSEMBLY (DIFFERENTIAL SCOPE LEADS)	P/N 2182907
SCOPE:	TEKTRONIX 453, 561A OR 647
TWO 10: 1 VOLTAGE PROBES (WITH GROUNDING CLIPS):	TEKTRONIX 6006
THERMOMETER:	P/N 5392366 (± 1/4 °F)

NOTE:
AN EQUIVALENT MAY BE SUBSTITUTED FOR ANY OF THE ABOVE PIECES OF TEST EQUIPMENT
FOR ALL TIME MEASUREMENTS USE SCOPE LEADS WITH SAME LENGTH AND GROUNDING CLIPS

II SJ-2 STORAGE ADJUSTMENT

IF PROBLEMS ARE EXPERIENCED DURING ADJUSTMENT OF STORAGE OR IF STORAGE IS NOT WORKING CORRECTLY AFTER COMPLETION OF THIS PROCEDURE, REFER TO MAINTENANCE MANUAL OF USING SYSTEM.

STORAGE ADJUSTMENT SHOULD BE MADE IF:

1. CARD G2 (VREF) OR N2 (STROBE) IS REPLACED. OR IF
2. THERE ARE INDICATIONS THAT THE STORAGE IS NOT ADJUSTED PROPERLY

COMPLETE ADJUSTMENT INCLUDES:

A. VOLTAGE ADJUSTMENT
B. STROBE ADJUSTMENT
C. V-REF ADJUSTMENT

A. VOLTAGE ADJUSTMENT

ALL VOLTAGES ARE MEASURED WITH RESPECT TO STORAGE UNIT GROUND EXCEPT WHERE NOTED OTHERWISE.

IN SYSTEMS WITH BUILT-IN METER, ALL VOLTAGE POINTS REQUIRED FOR STORAGE ADJUSTMENT ARE ALREADY WIRED TO METER

RUN PROGRAM WITH APPROXIMATELY 50 % ONES IN ALL ADDRESSES, WHEN ADJUSTING VOLTAGES. (E.G. STORAGE FILL, CORE ADJUST)

1. SET LOGIC VOLTAGES TO NOMINAL WHEN MEASURED AT STORAGE UNIT BOARD

-3.00 V	C2B06 (-3) TO C2D08 (GND)
+3.00 V	C2D03 (+3) TO C2D08 (GND)
+6.00 V	C2B11 (+6) TO C2D08 (GND)

2. SET SPECIAL VOLTAGES TO NOMINAL WHEN MEASURED AT STORAGE UNIT BOARD

+12.00 V	H2D04 (+12) TO H2D08 (GND)
-15.00 V	H2D07 (-15) TO H2D08 (GND)

3. MEASURE TEMPERATURE OF INCOMING AIR AT THE BOTTOM EDGE OF STORAGE UNIT BOARD. STORAGE COVER MUST BE CLOSED
4. SET V-REF TO "NOMINAL" FOR TEMPERATURE MEASURED IN "A3" ACCORDING TO CURVE OF FIGURE 1A. STORAGE COVER MUST BE CLOSED

V-REF	G2B12 (VREF) TO H2D04 (+12V)
V-REF POT	G2

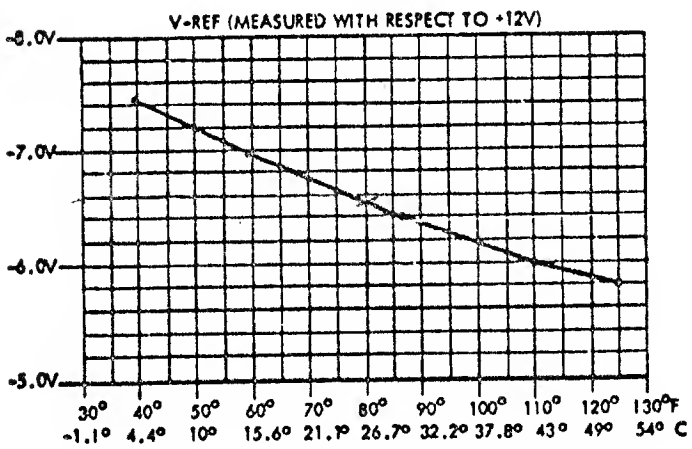

FIGURE 1A - V REF

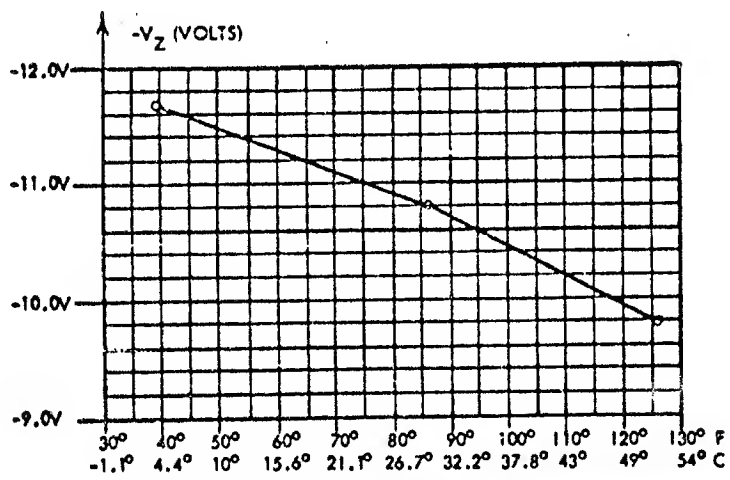

FIGURE 1B - V_Z

5. SET NOMINAL V_{ZN} (-9 TO -12 V) FOR TEMPERATURE MEASURED IN "A3" ACCORDING TO CURVE OF FIGURE 1B

V_Z: -10.9 A7D09 (-V_Z) TO A7D08 (GND)

NOTES

X PRINT TO ENG SPEC 895291

CIRCUIT AND PACKAGING STANDARD	
APPROVAL	DATE

INTERNATIONAL BUSINESS MACHINES CORP.						DATE	CHANGE NO.	APPROVAL	DATE	CHANGE NO.	APPROVAL	DEVELOPMENT NO.
NAME	SYSTEMS DIAGRAM					1SEP67	731506A					
SJ-2 ADJUSTMENT PROCEDURE						8SEP67	731506B					
DESIGN	LER	2JUL67	MODEL			17OCT67	731506C					
DETAIL	LJ	2JUL67	SCALE			24FEB69	258899					SA022
CHECK	GRM	31AUG67	DRAW	IDI	26NOV68							
APPRO			CHECK									

2196975

C

II STORAGE ADJUSTMENT PROCEDURE (CONTINUED)

B. STROBE ADJUSTMENT

IF STROBE IS RECORDED WITH RESPECT TO "SHORT TIME" (FIGURE 2A) USE "8A". IF STROBE IS RECORDED WITH RESPECT TO "PEAK OF ONES" (FIGURE 2B), OR IF VERIFICATION OF "SHORT TIME" IS DESIRED, USE "8B". USE PROGRAM WITH ALL ONES (OR MAXIMUM NUMBER OF ONES POSSIBLE IN ALL ADDRESSES (E G STORAGE FILL)

PN _____ EC _____
SIZE _____
UNIT SN _____ ARRAY SN _____
DATE: _____
AMBIENT TEMP: _____ °F _____ °C
STROBE(D2B02) _____ NSEC AFTER 1 VOLT LEVEL OF SHORT TIME N2G03

2A (NEW)

FIGURE 2
ADJUSTMENT
LABEL

PN _____ EC _____
SIZE _____
UNIT SN _____ ARRAY SN _____
DATE: _____
AMBIENT TEMP: _____ °F _____ °C
STROBE (D2B02): _____ NSEC AFTER CENTER OF "ONES" ENVELOPE (B7B02 AND B7D02)

2B (OLD)

8A "SHORT TIME" ADJUSTMENT (FOR USE WITH NEW (FIGURE 2A) ADJUSTMENT LABEL ONLY)

NOTE: DO NOT PERFORM STEP 1 FOR 4K STORAGE UNITS

1A. SCOPE SET-UP

CHANNEL 1:	+SENSE STROBE 4K PIN D2B02
CHANNEL 2:	+SENSE STROBE 8K PIN D2D02
SYNC EXTERN:	+READ CYCLE PIN N2J12
TIME:	0.2 μ S/DIV
MAGNIFIER:	10 X MAGNIFICATION
VOLTAGE:	0.05 V/DIV
MODE SWITCH:	ALTER

1B. THE DIFFERENCE BETWEEN THE LEADING EDGES OF THE STROBES MEASURED AT THE 0.5 VOLT LEVEL WITH RESPECT TO THEIR BASELINES, SHOULD BE LESS THAN 10 NS, (FIGURE 3) OTHERWISE REPLACE CARD D2

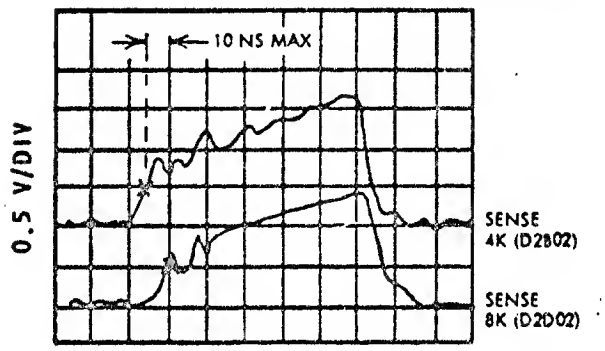

FIGURE 3

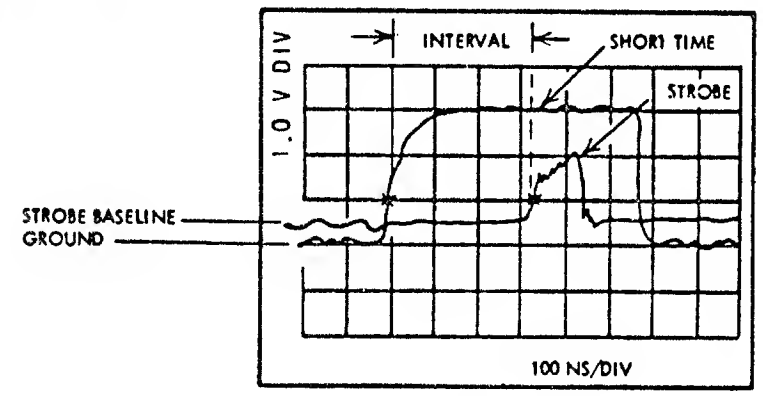

FIGURE 4

2A. SCOPE SET-UP

CHANNEL 1:	SHORT TIME		N2G03
CHANNEL 2:	+SENSE STROBE 4K		D2B02
SYNC:	+READ CYCLE		N2J12
TIME:	100 NS/DIV	BOTH CHANNELS	
VOLTAGE:	0.1 V/DIV		
MODE SWITCH:	ALTER		

2B. ADJUST POTENTIOMETER ON CARD N2 SO THAT INTERVAL BETWEEN LEADING EDGES OF SHORT TIME (MEASURED AT 1 VOLT LEVEL WITH RESPECT TO GROUND) AND "+SENSE STROBE 4K" (MEASURED AT 0.5 VOLT LEVEL WITH RESPECT TO BASELINE FIGURE 4) IS THE SAME AS THAT ON ADJUSTMENT LABEL.

CIRCUIT AND PACKAGING STANDARD	
APPROVAL	DATE

INTERNATIONAL BUSINESS MACHINES CORP.							DATE	CHANGE NO.	APPROVAL	DATE	CHANGE NO.	APPROVAL	DEVELOPMENT NO.
NAME	SYSTEMS DIAGRAM						1SEP67	731506A					
	SJ-2 ADJUSTMENT PROCEDURE						8SEP67	7315068					
DESIGN	LER	2JUL 67	MODEL				17OCT67	731506C					
DETAIL	LJ	2JUL 67	SCALE				DIC 68	258899					SA022
CHECK	GRM	31AUG67	DRAW	IDI	2NOV68								
APPRO			CHECK										

2196975

C

II STORAGE ADJUSTMENT PROCEDURE (CONTINUED)

BB. PEAK-OF-ONES ADJUSTMENT USE WITH (FIGURE 2B) LABEL (OR FOR VERIFICATION OF "SHORT TIME.")

NOTE: DO NOT PERFORM STEP 1 FOR 4K STORAGE UNITS

1A. SCOPE SET-UP

CHANNEL 1:	+SENSE STROBE 4K PIN D2B02
CHANNEL 2:	+SENSE STROBE 8K PIN D2D02
SYNC EXTERN:	+READ CYCLE PIN N2J12
TIME:	0.2μS/DIV AND 10X MAGNIFICATION BOTH CHANNELS
VOLTAGE:	0.05 V/DIV
MODE SWITCH:	ALTER

B. THE DIFFERENCE BETWEEN THE LEADING EDGE OF THE STROBES MEASURED AT 0.5 VOLT LEVEL WITH RESPECT TO BASELINES SHOULD BE LESS THAN 10 NS (FIGURE 3). OTHERWISE, REPLACE CARD D2

2A. SCOPE SET-UP USE DIFFERENTIAL SCOPE LEAD (P/N 2182907)

CHANNEL 1:	BIT 6 SENSE LINE B7B02
CHANNEL 2:	BIT 6 SENSE LINE B7D02
CHANNEL 2:	INVERTED MODE
SYNC:	+READ CYCLE PIN N2J12
TIME:	0.5μ S/DIV AND 10 X MAGNIFICATION BOTH CHANNELS
VOLTAGE:	0.02 V/DIV
MODE SWITCH:	ADD

B. SHORT N2B08 TO N2D08 TO REMOVE STROBE REFLECTION

C. ADJUST SCOPE SO THAT THE AVERAGE PEAK OF ONES ENVELOPE AT READ TIME IS AT THE CENTER VERTICAL LINE OF THE SCREEN (FIGURE 5)

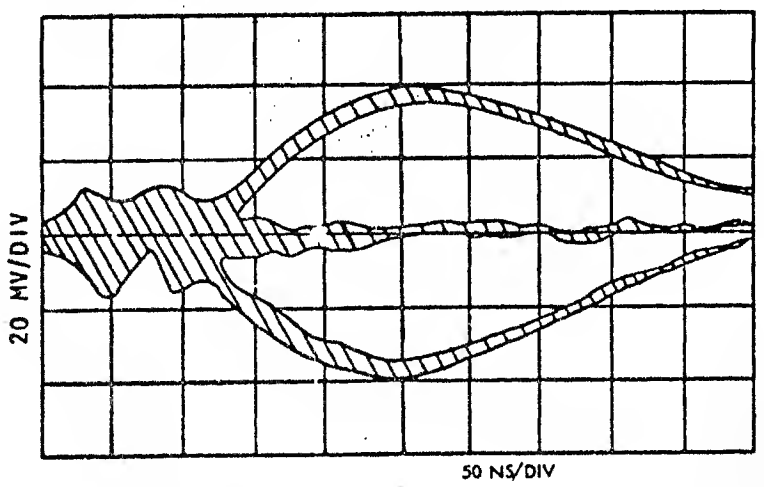

FIGURE 5

D. REMOVE SHORT BETWEEN N2B08 AND N2D08

E. REMOVE DIFFERENTIAL SCOPE LEAD. CONNECT CHANNEL 1 TO "+SENSE STROBE 4K" D2B02

F. CHANGE CHANNEL 1 SETTING TO 0.05 V/DIV, AND MODE TO CHANNEL 1

G. ADJUST POTENTIOMETER ON CARD N2 SO THAT THE LEADING EDGE OF "+SENSE STROBE 4K" (MEASURED AT 0.5 V LEVEL WITH RESPECT TO BASELINE) IS FROM 0 TO 10 NS AFTER THE CENTER VERTICAL LINE ON THE SCREEN

3. REPLACE OLD ADJUSTMENT LABEL (FIGURE 2B) WITH NEW LABEL (FIGURE 2A)

4A. SCOPE SET-UP

CHANNEL 1:	SHORT TIME PIN N2G03
CHANNEL 2:	+SENSE STROBE 4K PIN D2B02
SYNC:	+READ CYCLE PIN N2J12
TIME:	100 NS/DIV BOTH CHANNELS
VOLTAGE:	0.1 V/DIV
MODE SWITCH:	ALTER

B. MEASURE INTERVAL BETWEEN LEADING EDGES OF SHORT TIME N2G03 (AT 1 VOLT LEVEL WITH RESPECT TO GROUND) AND STROBE D2B02 (AT 0.5 V LEVEL WITH RESPECT TO BASELINE) (FIGURE 4)

C. RECORD INTERVAL ON NEW ADJUSTMENT LABEL

D. RECORD OTHER DATA FROM OLD LABEL TO NEW LABEL (EXCEPT VREF, VZ, AND TEMPERATURE INFORMATION)

II. STORAGE ADJUSTMENT PROCEDURE (CONTINUED)

C. VREF ADJUSTMENT

1. RUN WORST CASE PATTERNS OR STORAGE ADJUST PROGRAMS PROVIDED BY SYSTEM OR TESTER. KEEP STORAGE COVER CLOSED
2. MEASURE TEMPERATURE OF INCOMING AIR AT THE BOTTOM EDGE OF STORAGE UNIT BOARD WITH COVER CLOSED
3. SET NOMINAL V_{ZN} (-9V TO -12V) FOR TEMPERATURE MEASURED IN "C2" ACCORDING TO CURVE OF FIGURE 1B.

   V_Z: A7D09 ($-V_Z$) TO A7D08 (GND)
4. RECORD TEMPERATURE AND NOMINAL V_{ZN} ON ADJUSTMENT LABEL

NOTE:

SYSTEMS (E G 360-20) WITH A CLASS B MAXIMUM TEMPERATURE LIMIT (32° C/90° F) USE SHORT PROCEDURE "5A"

SYSTEMS (E G 1800) WITH MORE SEVERE TEMPERATURE REQUIREMENTS USE PROCEDURE "5B"

5A. V-REF ADJUSTMENT (SHORT PROCEDURE)

1. DETERMINE OPERATING LIMITS BY SLOWLY ADJUSTING VREF TO UPPER (VREF UPPER) AND LOWER (VREF LOWER) FAILURE POINTS

   V-REF: G2B12 (VREF) TO H2D04 (+12 V)

   V-REF POT: G2
2. SET V-REF 0.1 VOLT BELOW MID POINT OF UPPER AND LOWER FAILURE POINTS. RECORD SETTING AND LIMITS ON ADJUSTMENT LABEL
3. V-REF SET IN "5 A 2" SHOULD BE EQUAL TO OR GREATER THAN VREF LOWER MULTIPLIED BY 1.0

5B. V-REF ADJUSTMENT (LONG PROCEDURE)

1. SET V_Z (-9 TO -12 V) TO 6 % BELOW NOMINAL V_{ZN} FROM C3 ($V_Z = 0.94\ V_{ZN}$)

   VZ A7D09 ($-V_Z$) TO A7D08 (GND)
2. DETERMINE UPPER AND LOWER VREF OPERATING LIMITS BY SLOWLY ADJUSTING VREF POTENTIOMETER ON CARD G2. RECORD VREF OPERATING LIMITS ON ADJUSTMENT LABEL

   VREF: G2B12 (VREF) TO H2D04 (+12 V)

   V-REF POT: G2
3. SET V_Z TO 6 % ABOVE NOMINAL ($V_Z = 1.06\ V_{ZN}$)

   V_Z A7D09 ($-V_Z$) TO A7D08 (GND)
4. DETERMINE UPPER AND LOWER V REF OPERATING LIMITS BY SLOWLY ADJUSTING POTENTIOMETER ON CARD G2. RECORD ON ADJUSTMENT LABEL
5. V_O IS MIDPOINT BETWEEN V_A AND V_B (FIGURE 7). SET VREF 0.15 VOLTS BELOW V_O IF TEMPERATURE IN "C2" IS BELOW 106° F; OTHERWISE SET TO V_O.

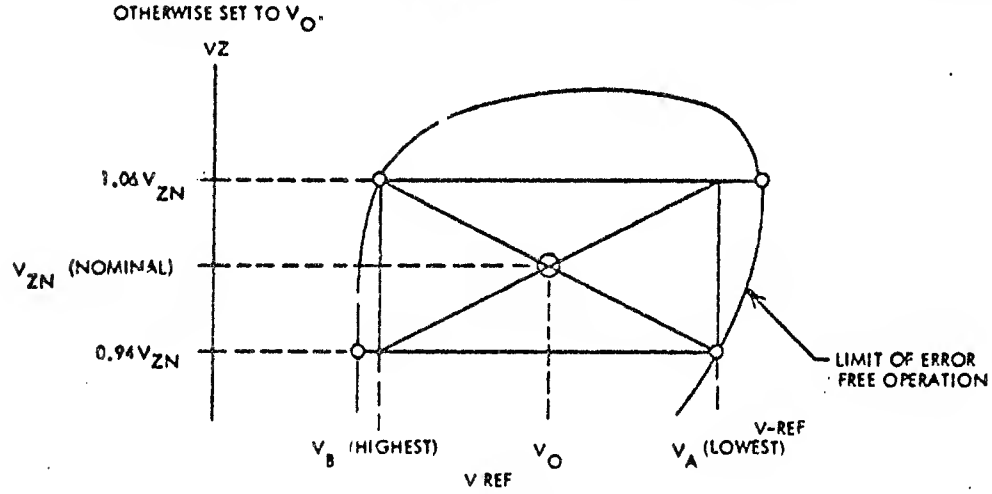

FIGURE 7

6. RESTORE $-V_Z$ TO NOMINAL (V_{ZN} SET IN "C3")
7. DETERMINE THE V-REF OPERATING RANGE. V REF SET MUST BE GREATER THAN 1.06 TIMES LOWER FAILURE POINT (V_B)
8. RECORD V-REF SET AND LIMITS ON ADJUSTMENT LABEL

CIRCUIT AND PACKAGING STANDARD	
APPROVAL	DATE

INTERNATIONAL BUSINESS MACHINES CORP.						DATE	CHANGE NO.	APPROVAL	DATE	CHANGE NO.	APPROVAL	DEVELOPMENT NO.
NAME SYSTEMS DIAGRAM						15EP67	731506A					
SJ-2 ADJUSTMENT PROCEDURE						85EP67	7315065					
DESIGN	LER	2JUL67	MODEL			170CT67	731506C					
DETAIL	LJ	2JUL67	SCALE			24FEB69	258899					SA022
CHECK	GRM	31AUG67	DRAW	101	26NOV68							
APPRO			CHECK									

2196975

C

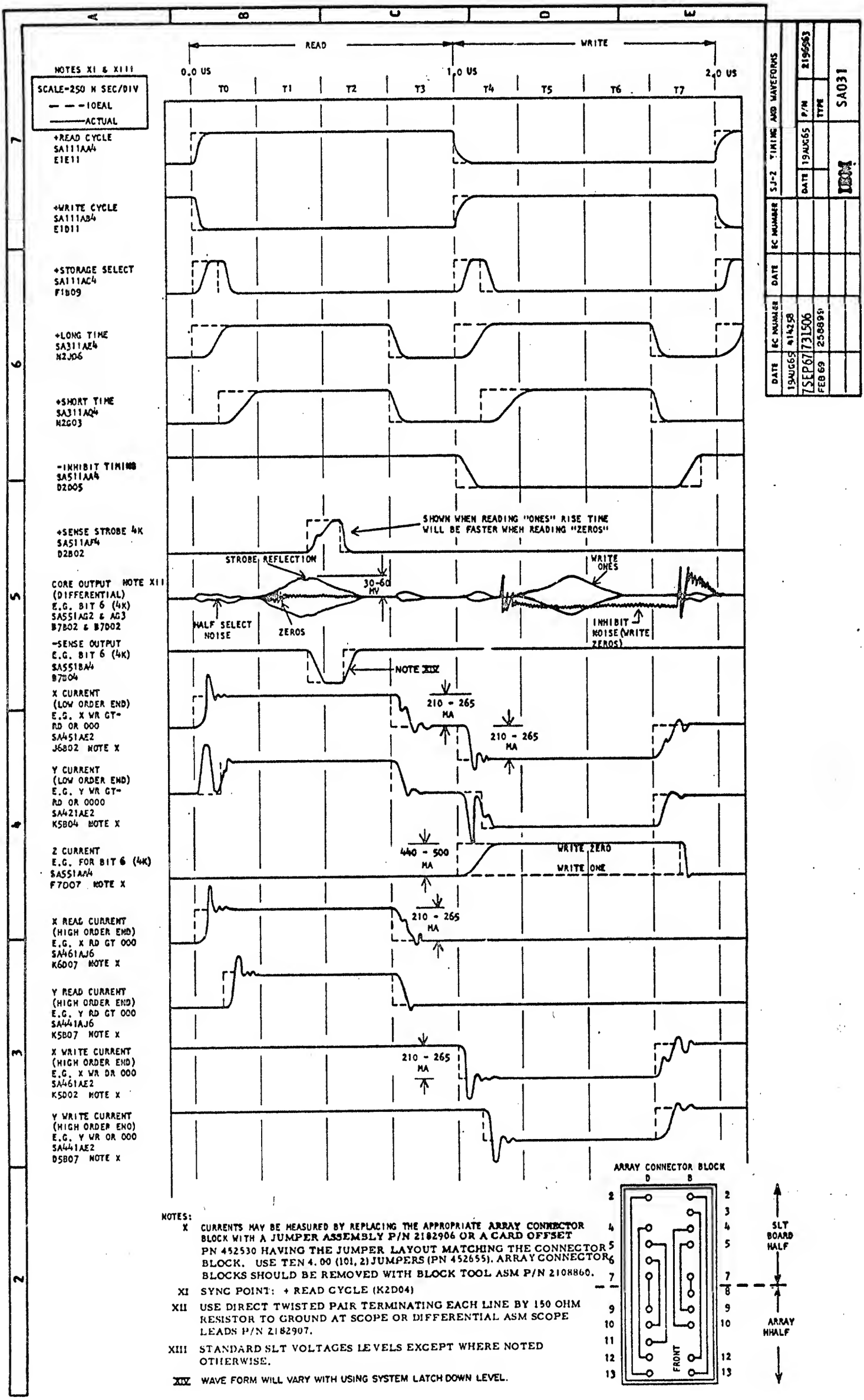

NOTES:

X CURRENTS MAY BE MEASURED BY REPLACING THE APPROPRIATE ARRAY CONNECTOR BLOCK WITH A JUMPER ASSEMBLY P/N 2182906 OR A CARD OFFSET PN 452530 HAVING THE JUMPER LAYOUT MATCHING THE CONNECTOR BLOCK. USE TEN 4.00 (101.2) JUMPERS (PN 452655). ARRAY CONNECTOR BLOCKS SHOULD BE REMOVED WITH BLOCK TOOL ASM P/N 2108860.

XI SYNC POINT: + READ CYCLE (K2D04)

XII USE DIRECT TWISTED PAIR TERMINATING EACH LINE BY 150 OHM RESISTOR TO GROUND AT SCOPE OR DIFFERENTIAL ASM SCOPE LEADS P/N 2182907.

XIII STANDARD SLT VOLTAGES LEVELS EXCEPT WHERE NOTED OTHERWISE.

XIV WAVE FORM WILL VARY WITH USING SYSTEM LATCH DOWN LEVEL.

DATE	EC NUMBER
19AUG65	414258
7SEP67	731506
FEB 69	258899

DATE	EC NUMBER

SJ-2 TIMING AND WAVEFORMS

DATE 19AUG65 P/N 2196563

TYPE

IBM

SA031

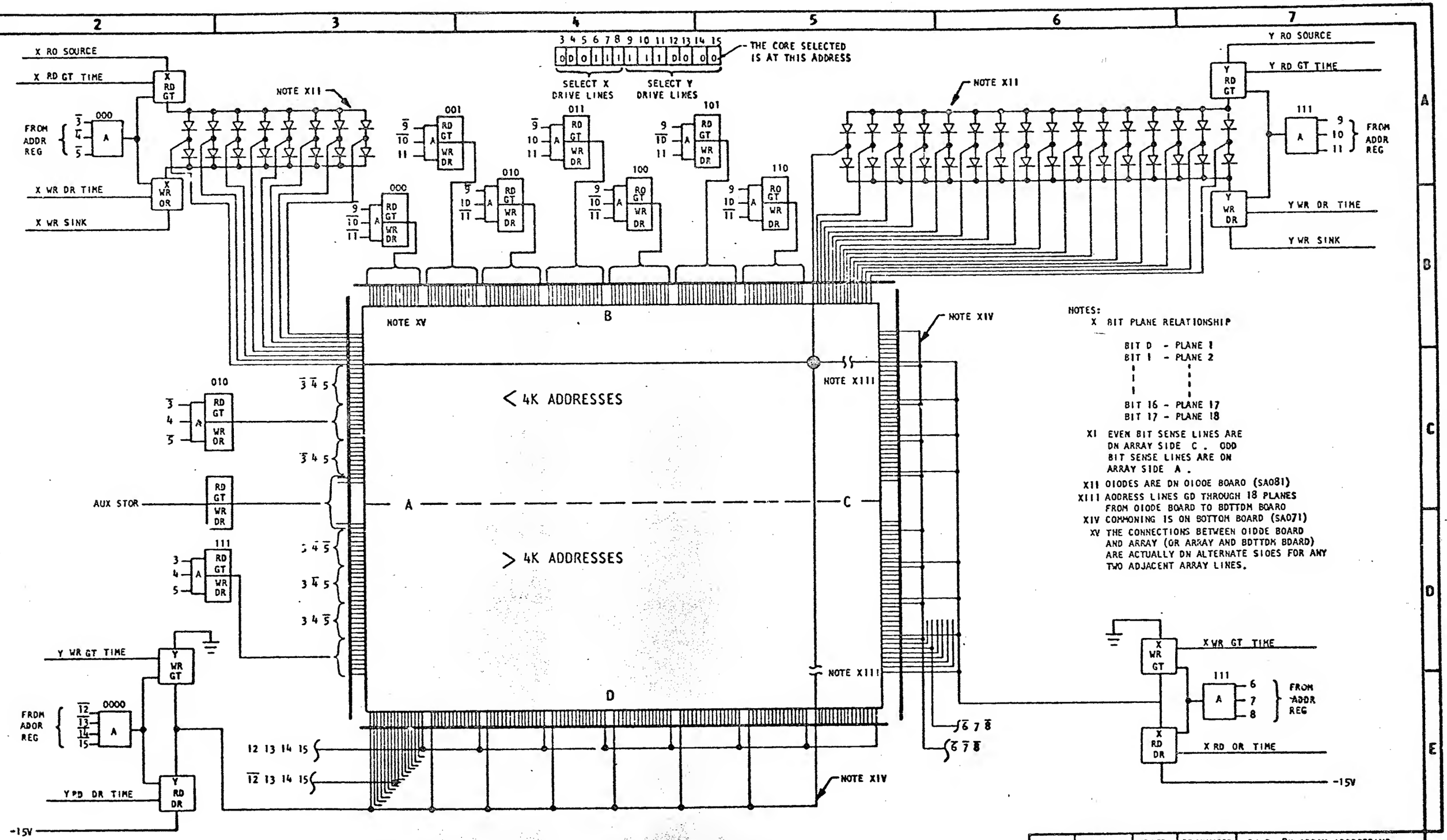

DATE	EC NUMBER	DATE	EC NUMBER	SJ-2 8K ARRAY ADDRESSING			
19AUG65	414258						
				DATE	19AUG65	P/N	2196964
						TYPE	
				IBM		SA041	

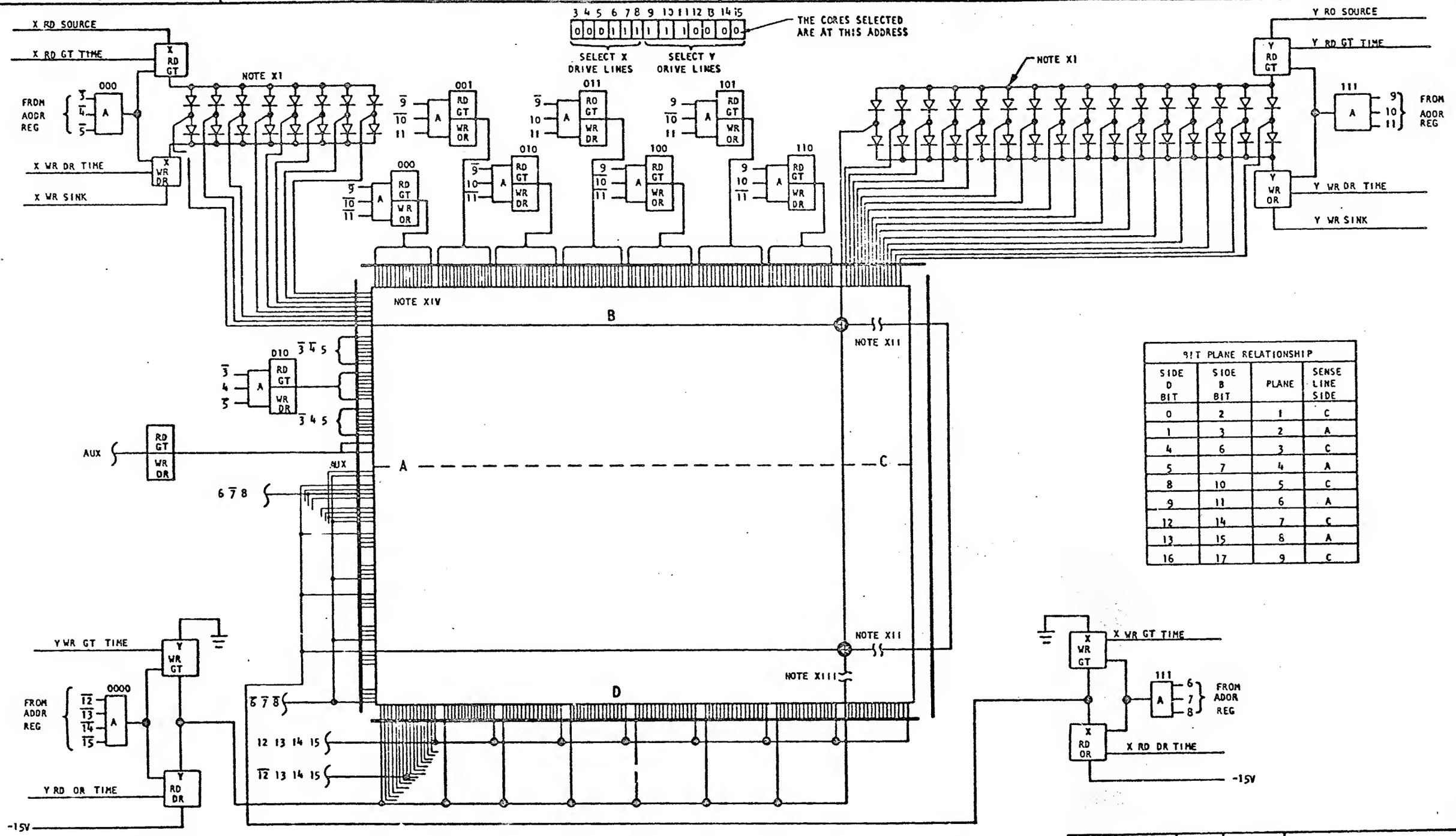

BIT PLANE RELATIONSHIP			
SIDE D BIT	SIDE B BIT	PLANE	SENSE LINE SIDE
0	2	1	C
1	3	2	A
4	6	3	C
5	7	4	A
8	10	5	C
9	11	6	A
12	14	7	C
13	15	8	A
16	17	9	C

NOTES:

XI DIODES ARE ON DIODE BOARD (SA082).

XII X ADDRESS LINES FROM DIODE BOARD GO THROUGH THE ARRAY ON SIDE B, JUMPER ACROSS AT BOTTOM BOARD (SA072), AND RETURN VIA SIDE 0 TO DIODE BOARD FOR X COMMONING (SA082)

XIII Y ADDRESS LINES GO THROUGH THE ARRAY FROM DIODE BOARD AND ARE COMMONED ON THE BOTTOM BOARD (SA072)

XIV THE CONNECTIONS BETWEEN DIODE BOARD AND ARRAY (OR ARRAY AND BOTTOM BOARD) ARE ACTUALLY ON ALTERNATE SIDES FOR ANY TWO ADJACENT ARRAY LINES.

DATE	EC NUMBER	DATE	EC NUMBER	SJ-2 4K ARRAY ADDRESSING			
19AUG65	414258						
				DATE	19AUG65	P/N	2196965
						TYPE	
				IBM		SA042	

2196366

SA043

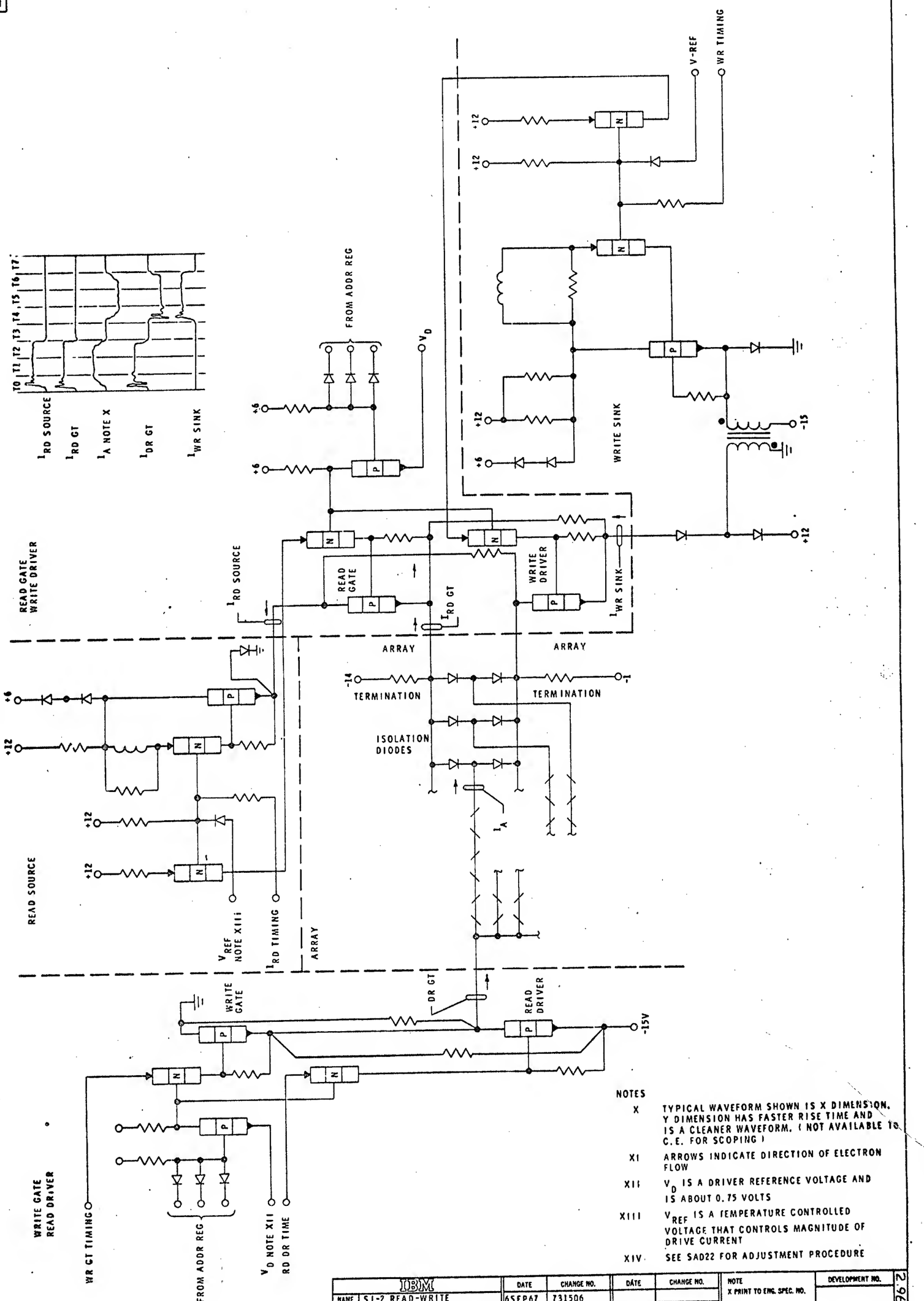

NOTES

X TYPICAL WAVEFORM SHOWN IS X DIMENSION. Y DIMENSION HAS FASTER RISE TIME AND IS A CLEANER WAVEFORM. (NOT AVAILABLE TO C.E. FOR SCOPING)

XI ARROWS INDICATE DIRECTION OF ELECTRON FLOW

XII V_D IS A DRIVER REFERENCE VOLTAGE AND IS ABOUT 0.75 VOLTS

XIII V_{REF} IS A TEMPERATURE CONTROLLED VOLTAGE THAT CONTROLS MAGNITUDE OF DRIVE CURRENT

XIV SEE SAD22 FOR ADJUSTMENT PROCEDURE

IBM				DATE	CHANGE NO.	DATE	CHANGE NO.	NOTE	DEVELOPMENT NO.
NAME SJ-2 READ-WRITE				6SEP67	731506			X PRINT TO ENG. SPEC. NO.	
SCHEMATIC CARD									SA043
DESIGN		MODEL							
DETAIL									
CHECK		DRAW KE 11AUG67							
APPRO		CHECK HH 15AUG67							

2 996966

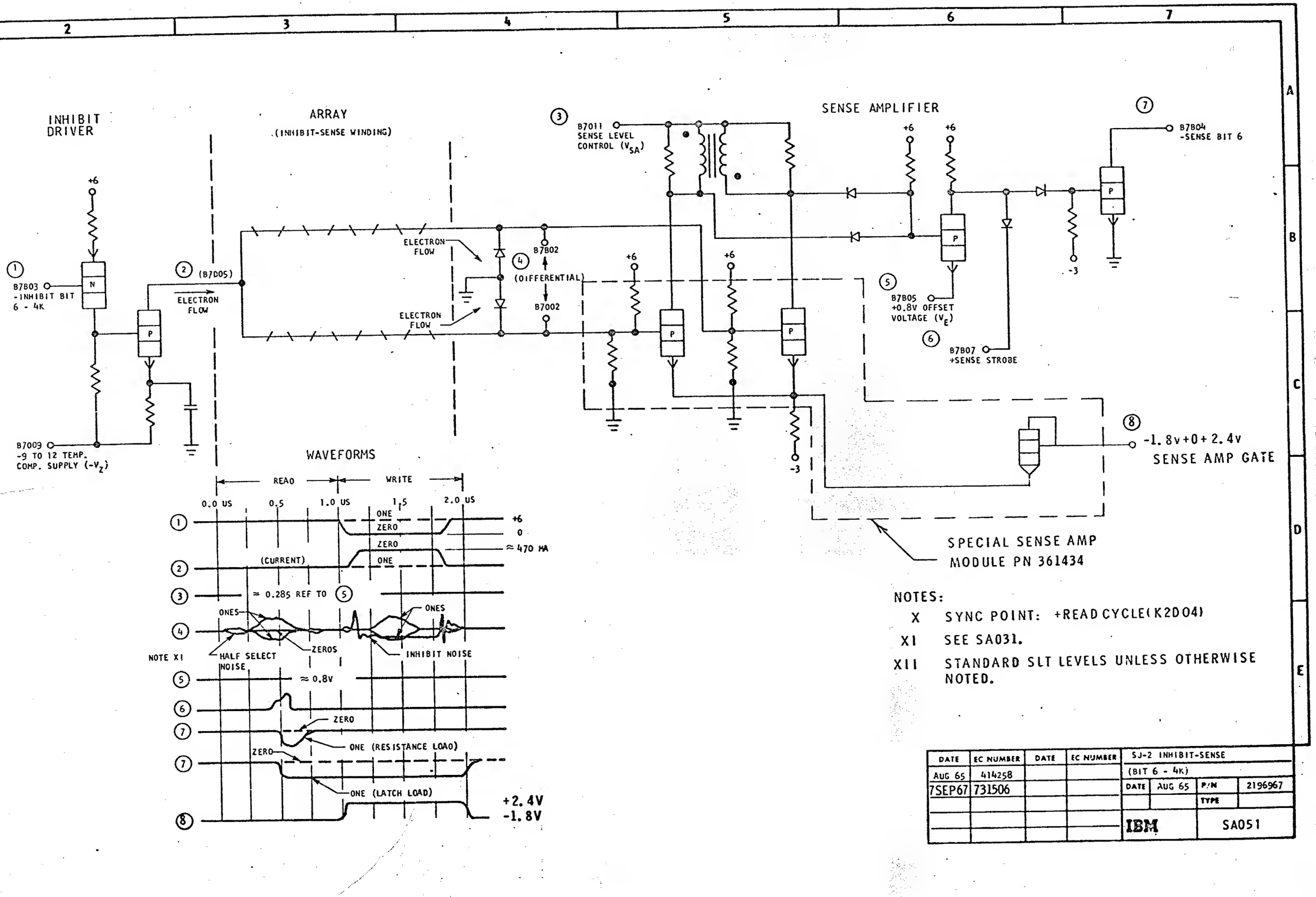

NOTES:

X SYNC POINT: +READ CYCLE(K2D04)

X1 SEE SA031.

X11 STANDARD SLT LEVELS UNLESS OTHERWISE NOTED.

DATE	EC NUMBER	DATE	EC NUMBER
AUG 65	414258		
7SEP67	731506		

SJ-2 INHIBIT-SENSE
(BIT 6 - 4K)

DATE	AUG 65	P/N	2196967
		TYPE	

IBM SA051

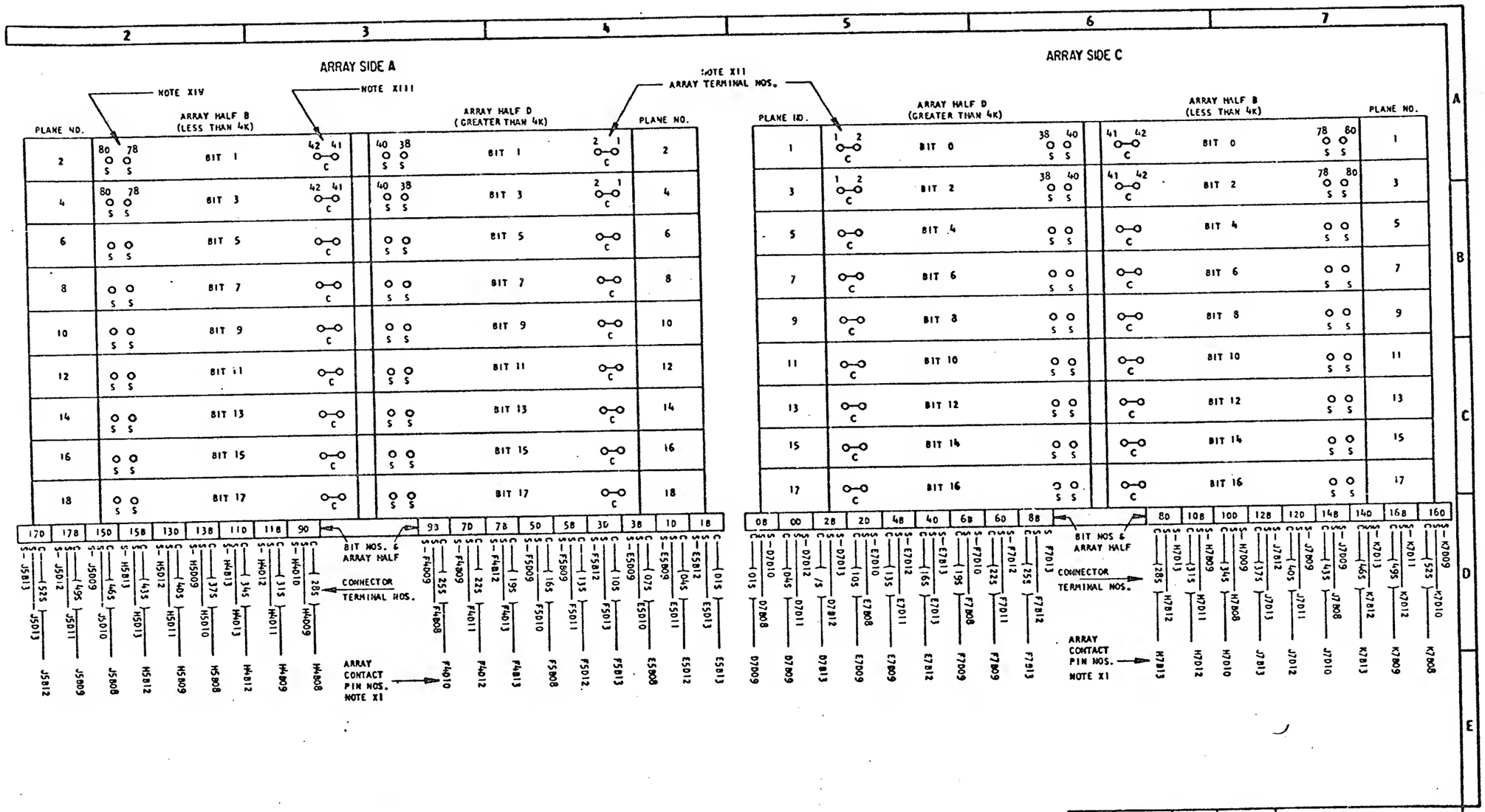

NOTES:

XI EACH ARRAY CONTACT PIN IS JUMPERED TO A CONNECTOR TERMINAL VIA A PRINTED CIRCUIT (SEE SA012)

XII EACH CONNECTOR TERMINAL IS JUMPERED TO AN ARRAY TERMINAL VIA A DISCRETE WIRE (SEE SA012.) THE WIRES ARE GOUPED IN TWISTED TRIPLETS.

XIII ARRAY TERMINALS MARKED C ARE COMMONED, E.G. 1-2 OR 41-42

XIV ARRAY TERMINAL MARKED S IS JUMPERED TO EITHER CONNECTOR TERMINAL MARKED S FOR A GIVEN BIT AND ARRAY HALF.

DATE	EC NUMBER	DATE	EC NUMBER	SJ-2 8K			
AUG 65	414258			SENSE CONNECTIONS			
FEB 69	258899			DATE	AUG 65	P/N	2196968
						TYPE	
				IBM		SA061	

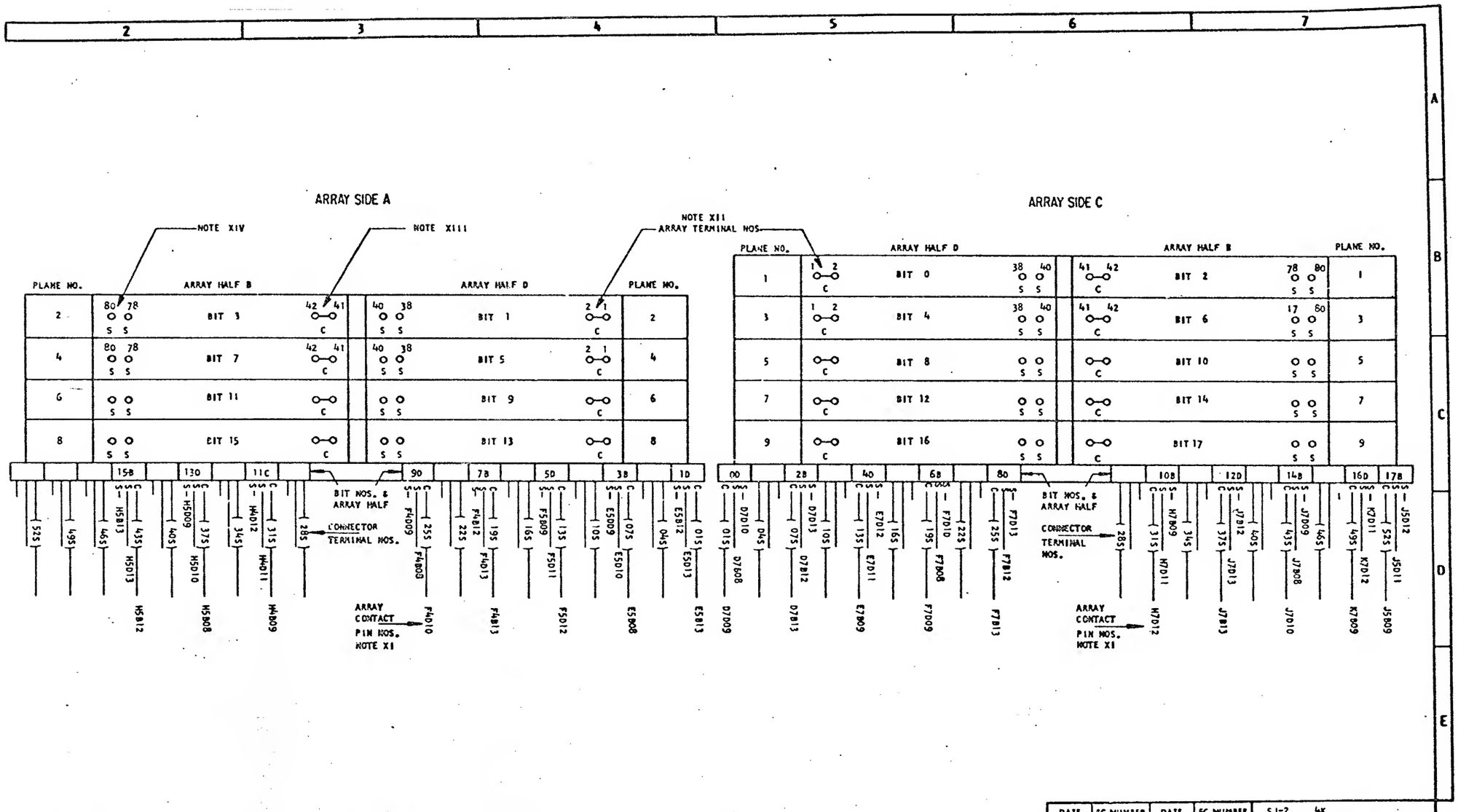

NOTES:
- XI EACH ARRAY CONTACT PIN IS JUMPERED TO A CONNECTOR TERMINAL VIA A PRINTED CIRCUIT (SEE SA012).
- XII EACH CONNECTOR TERMINAL IS JUMPERED TO AN ARRAY TERMINAL VIA A DISCRETE WIRE (SEE SA012.) THE WIRES ARE GROUPED IN TWISTED TRIPLETS.
- XIII ARRAY TERMINALS MARKED C ARE COMMONED, E.G. 1-2 OR 41-42
- XIV ARRAY TERMINAL MARKED S IS JUMPERED TO EITHER CONNECTOR TERMINAL MARKED S FOR A GIVEN BIT AND ARRAY HALF.

DATE	EC NUMBER	DATE	EC NUMBER
AUG 65	414258		
FEB 69	258899		

SJ-2 4K

SENSE CONNECTIONS

DATE	AUG 65	P N	2196963
		TYPE	

IBM SA062

2196970

SA071

SHEET 1 OF 2

STORAGE ADDRESS REGISTER

HIGH ORDER X			LOW ORDER X			HIGH ORDER Y			LOW ORDER Y			
3	4	5	6	7	8	9	10	11	12	13	14	15
WR RD	DR, GT		WR RD	GT- DR		WR RD	DR, GT		WR RO		GT- DR	

BOARD TERMINAL PROFILES - REFERENCE

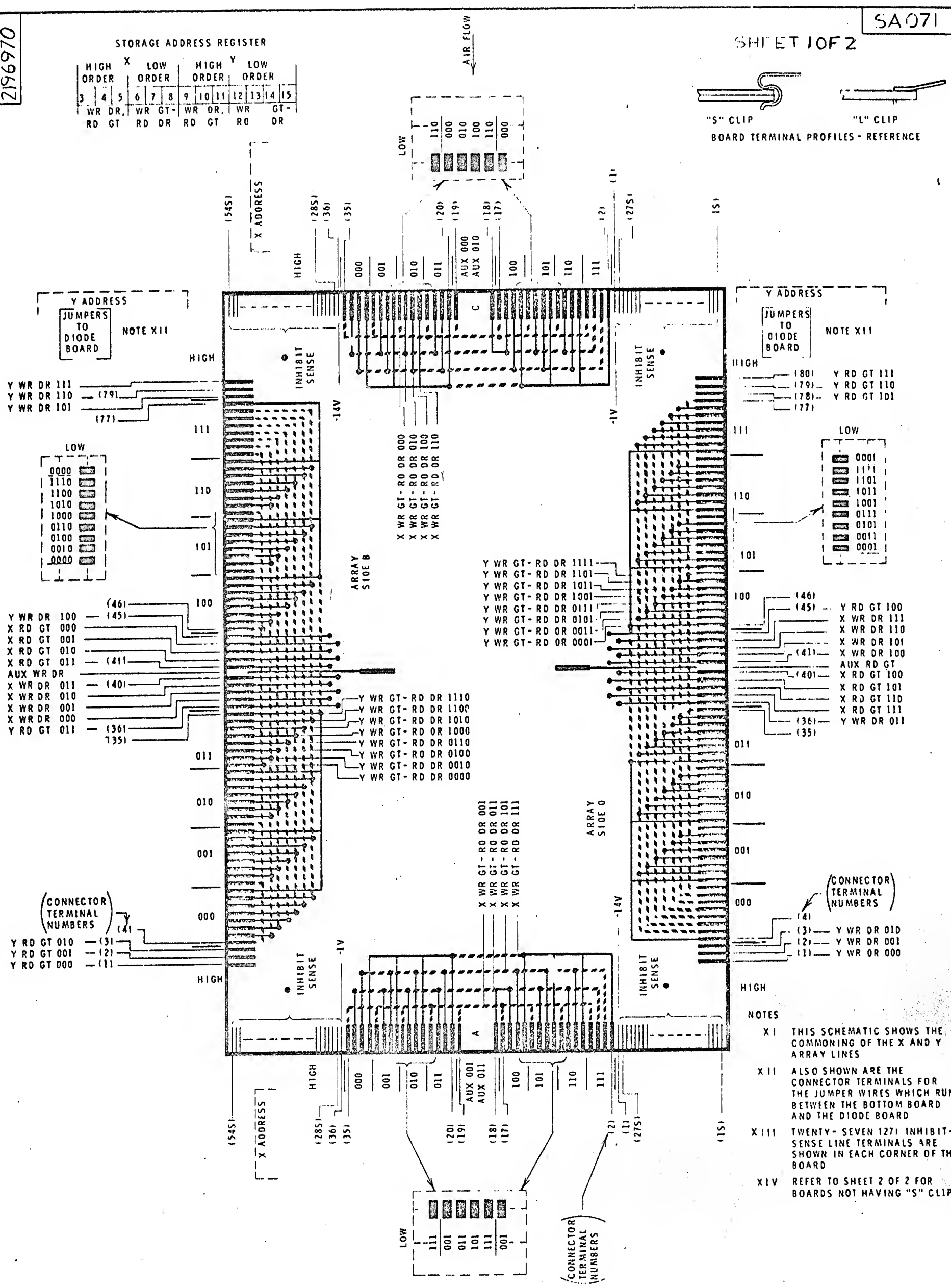

NOTES

X I THIS SCHEMATIC SHOWS THE COMMONING OF THE X AND Y ARRAY LINES

X II ALSO SHOWN ARE THE CONNECTOR TERMINALS FOR THE JUMPER WIRES WHICH RUN BETWEEN THE BOTTOM BOARD AND THE DIODE BOARD

X III TWENTY-SEVEN (27) INHIBIT-SENSE LINE TERMINALS ARE SHOWN IN EACH CORNER OF THE BOARD

X IV REFER TO SHEET 2 OF 2 FOR BOARDS NOT HAVING "S" CLIPS

IBM				DATE	CHANGE NO.	DATE	CHANGE NO.	NOTE	DEVELOPMENT NO.
NAME	SJ-2 8K BOTTOM BOARD			19JG67	414258			X PRINT TO ENG. SPEC. NO.	
	SCHEMATIC			16OV67	731517				
DESIGN		MODEL		9EB68	731675				
DETAIL	LO 16NOV67								SA071
CHECK		DRAW							
APPRO		CHECK							

2196970

2196970

SA071

SHEET 2 OF 2

STORAGE ADDRESS REGISTER

X HIGH ORDER			X LOW ORDER			Y HIGH ORDER			Y LOW ORDER			
3	4	5	6	7	8	9	10	11	12	13	14	15
WR RD		DR, GT	WR RD		GT-OR	WR RD		DR, GT	WR RD		GT-OR	

AIR FLOW

NUMBERING SEQUENCE FOR SENSE CONNECTIONS

DETAIL B

DETAIL A

X ADDRESS

Y ADDRESS

JUMPERS TO DIODE BOARD

NOTE X II

HIGH

LOW

INHIBIT SENSE DETAIL B

INHIBIT SENSE DETAIL A

-14V

-1V

ARRAY S10E B

ARRAY S10E D

AUX WR DR (81)
Y WR DR 111 (80)
Y WR DR 110 (79)
Y WR DR 101 (77)

Y WR DR 100 (46)
X RD GT 000 (45)
X RO GT 001
X RO GT 010
X RD GT 011 (41)

X WR DR 011 (40)
X WR DR 010
X WR OR 001
X WR DR 000
Y RD GT 011 (36)
(35)

Y RD GT 010 (3)
Y RD GT 001 (2)
Y RD GT 000 (1)

CONNECTOR TERMINAL NUMBERS (4)

Y WR GT-RD DR 1111
Y WR GT-RO OR 1100
Y WR GT-RO DR 1010
Y WR GT-RD DR 1000
Y WR GT-RO OR 0110
Y WR GT-RO OR 0100
Y WR GT-RD DR 0010
Y WR GT-RD DR 0000

X WR GT-RO DR 000
X WR GT-RO DR 010
X WR GT-RO DR 100
X WR GT-RO DR 110

X WR GT-RO OR 001
X WR GT-RO DR 011
X WR GT-RO OR 101
X WR GT-RO DR 111

Y WR GT-RD DR 1111
Y WR GT-RD DR 1101
Y WR GT-RD DR 1011
Y WR GT-RD DR 1001
Y WR GT-RO DR 0111
Y WR GT-RD DR 0101
Y WR GT-RD DR 0011
Y WR GT-RD DR 0001

Y RO GT 111 (81)
Y RD GT 110 (80)
Y RD GT 101 (79)
(78)

Y RD GT 100 (47)
(46)
X WR DR 111
X WR DR 110
X WR DR 101
X WR DR 100 (42)

X RD GT 100 (41)
X RD GT 101
X RD GT 110
X RD GT 111
Y WR DR 011 (37)
(36)

Y WR DR 010 (5)
Y WR DR 001 (4)
Y WR DR 000 (3)
AUX RD GT (2)
(1)

IBM				DATE	CHANGE NO.	DATE	CHANGE NO.	NOTE X-PRINT TO ENG. SPEC. NO.	DEVELOPMENT NO.	2196970
NAME	SJ-2 8K BOTTOM BOARD			19AUG67	414258					
	SCHEMATIC			15NOV67	731517					
DESIGN			MODEL	9FEB68	731675					
DETAIL	LD	8NOV67							SA071	
CHECK	PG	9Nov67	DRAW							
APPRO	ABW	9Nov 7	CHECK							

SA072

2196971

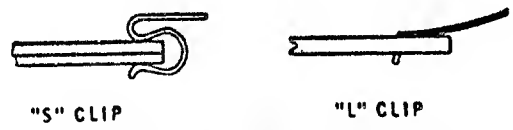

BOARD TERMINAL PROFILES REFERENCE

AIR FLOW

STORAGE ADDRESS REGISTER

HIGH ORDER X			LOW ORDER			HIGH ORDER Y			LOW ORDER			
3	4	5	6	7	8	9	10	11	12	13	14	15
WR RD	DR, GT		WR RD	GT-DR		WR RD	OR, GT		WR RD		GT-DR	

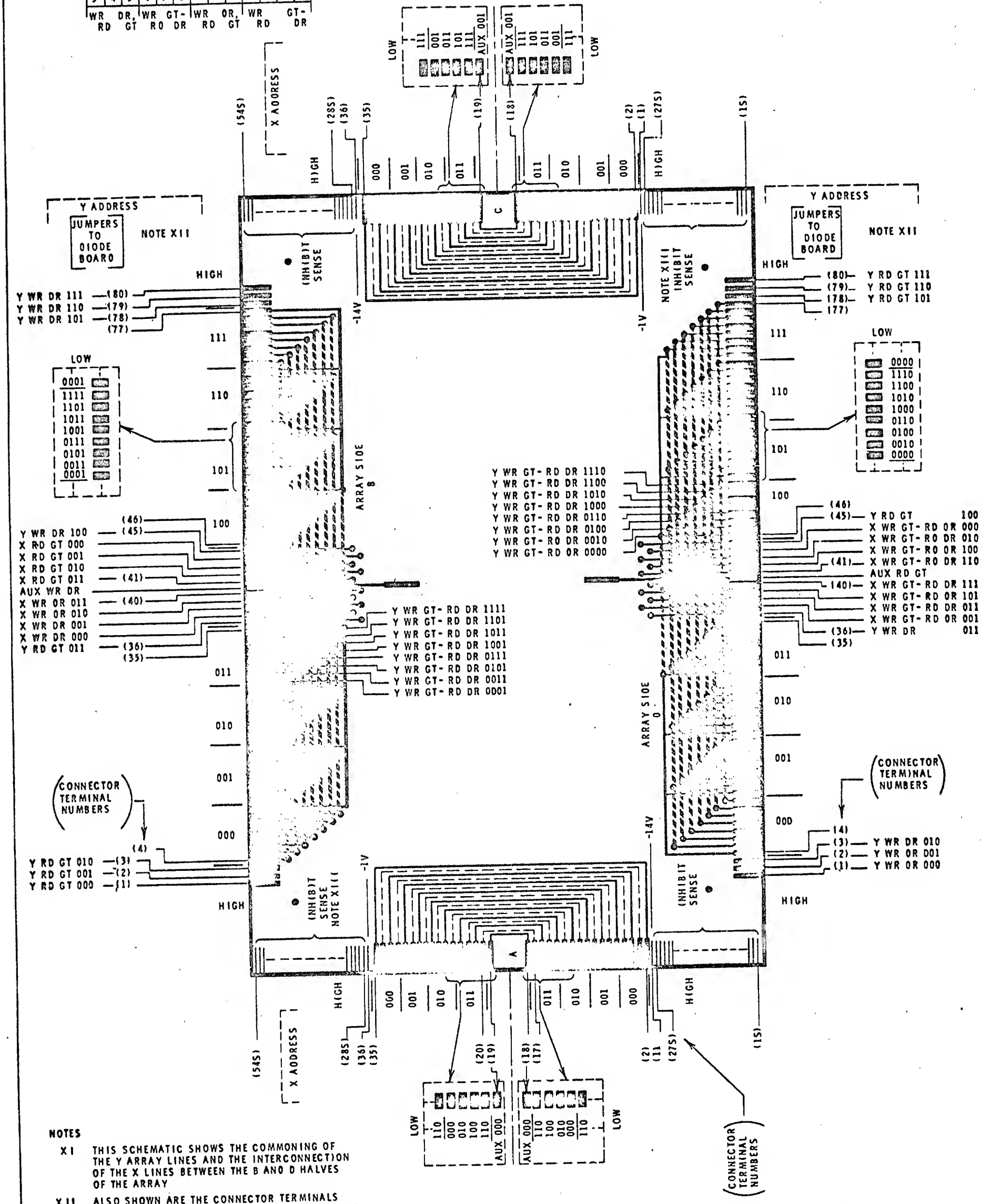

NOTES

X I THIS SCHEMATIC SHOWS THE COMMONING OF THE Y ARRAY LINES AND THE INTERCONNECTION OF THE X LINES BETWEEN THE B AND D HALVES OF THE ARRAY

X II ALSO SHOWN ARE THE CONNECTOR TERMINALS FOR THE JUMPER WIRES WHICH RUN BETWEEN THE BOTTOM BOARD AND THE DIODE BOARD

X III TWENTY-FOUR (24) INHIBIT-SENSE LINE TERMINALS ARE ACTIVE ON SIDE A AND 30 ON SIDE C

X IV REFER TO SHEET 2 OF 2 FOR BOARDS NOT HAVING "S" CLIPS

IBM				DATE	CHANGE NO.	DATE	CHANGE NO.	NOTE	DEVELOPMENT NO.
NAME	SJ-2 4K BOTTOM BOARD			19AUG65	414258			X PRINT TO ENG. SPEC. NO.	
	SCHEMATIC			12FEB68	731675				
DESIGN			MODEL						
DETAIL	LD	12FEB68							SA072
CHECK			DRAW CHECK						
APPRO									

2196971

2196971

SHEET 2 OF 2

3A072

STORAGE ADDRESS REGISTER

X HIGH ORDER			X LOW ORDER			Y HIGH ORDER			Y LOW ORDER			
3	4	5	6	7	8	9	10	11	12	13	14	15
WR RD		DR, GT	WR RD		GT-DR	WR RD		DR, GT	WR RD		GT-DR	

AIR FLOW

DETAIL B

DETAIL A

NUMBERING SEQUENCE FOR SENSE CONNECTIONS

X ADDRESS (54S) (28S) (36) (35) (19) (18) (2) (11) (27S) (1S)

HIGH 000 001 010 011 LOW 111 001 011 101 111 AUX 001

Y ADDRESS

JUMPERS TO DIODE BOARD

NOTE XII

AUX WR DR (81)
Y WR DR 111 (80)
Y WR DR 110 (79)
Y WR DR 101 (78)
(77)

LOW 0001 1111 1101 1011 1001 0111 0101 0011 0001

Y WR DR 100 (46) (45)
X RD GT 000
X RD GT 001
X RD GT 010
X RD GT 011 (41)
X WR DR 011 (40)
X WR DR 010
X WR DR 001
X WR DR 000
Y RD GT 011 (36) (35)

(CONNECTOR TERMINAL NUMBERS)

Y RD GT 010 (3)
Y RD GT 001 (2)
Y RD GT 000 (1)

DETAIL B INHIBIT SENSE

-14V

ARRAY SIDE B

Y WR GT-RD DR 1111
Y WR GT-RD DR 1101
Y WR GT-RD DR 1011
Y WR GT-RD DR 1001
Y WR GT-RD DR 0111
Y WR GT-RD DR 0101
Y WR GT-RD DR 0011
Y WR GT-RD DR 0001

Y WR GT-RD DR 1110
Y WR GT-RD DR 1100
Y WR GT-RD DR 1010
Y WR GT-RD DR 1000
Y WR GT-RD DR 0110
Y WR GT-RD DR 0100
Y WR GT-RD DR 0010
Y WR GT-RD DR 0000

ARRAY SIDE D

DETAIL A INHIBIT SENSE

NOTE XIII

Y ADDRESS

JUMPERS TO DIODE BOARD

NOTE XII

Y RD GT 111 (81)
Y RD GT 110 (80)
Y RD GT 101 (79)
(78)

LOW 0000 1110 1100 1010 1000 0110 0100 0010 0000

Y RD GT 100 (47) (46)
X WR GT-RD DR 000
X WR GT-RD DR 010
X WR GT-RD DR 100
X WR GT-RD DR 110 (42)
X WR GT-RD DR 111 (41)
X WR GT-RD DR 101
X WR GT-RD DR 011
X WR GT-RD DR 001
X WR DR 011 (37) (36)

(CONNECTOR TERMINAL NUMBERS)

Y WR DR 010 (5) (4)
Y WR DR 001 (3)
Y WR DR 000 (2)
AUX RD GT (1)

-1V

X ADDRESS (54S) (28S) (36) (35) (20) (19) (18) (17) (2) (11) (27S) (1S)

HIGH 000 001 010 011 LOW 110 000 010 100 110 AUX 000

(CONNECTOR TERMINAL NUMBERS)

IBM			DATE	CHANGE NO.	DATE	CHANGE NO.	NOTE	DEVELOPMENT NO.
NAME	SJ-2 4K BOTTOM BOARD		19AUG 65	414258			X POINT TO ENG. SPEC. NO.	
	SCHEMATIC		9 FEB 68	731675				
DESIGN		MODEL						
DETAIL	LD 9FEB68							SA072
CHECK		DRAW						
APPRO		CHK						

2196971

SA081

SHEET 1 OF 2

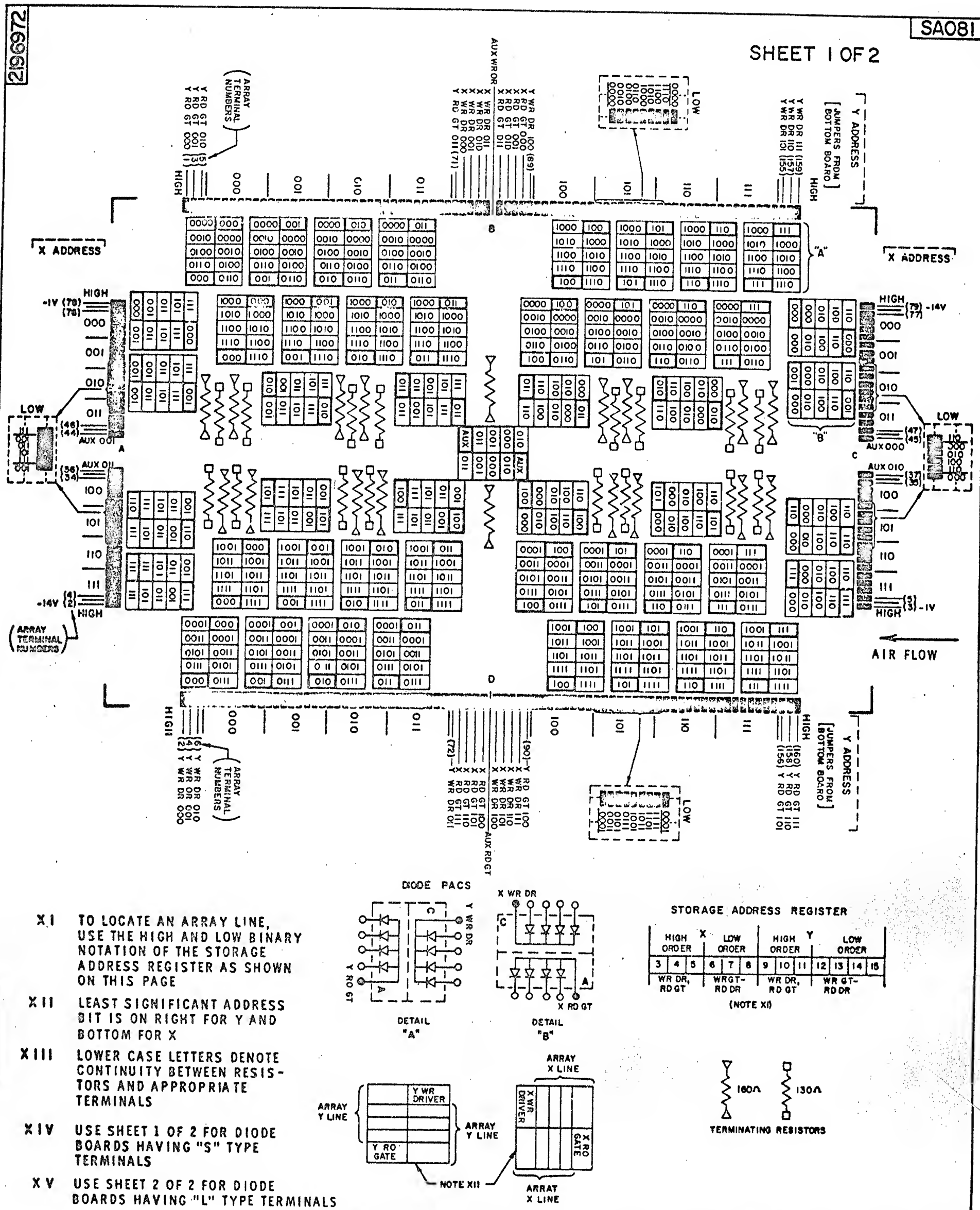

X I TO LOCATE AN ARRAY LINE, USE THE HIGH AND LOW BINARY NOTATION OF THE STORAGE ADDRESS REGISTER AS SHOWN ON THIS PAGE

X II LEAST SIGNIFICANT ADDRESS BIT IS ON RIGHT FOR Y AND BOTTOM FOR X

X III LOWER CASE LETTERS DENOTE CONTINUITY BETWEEN RESISTORS AND APPROPRIATE TERMINALS

X IV USE SHEET 1 OF 2 FOR DIODE BOARDS HAVING "S" TYPE TERMINALS

X V USE SHEET 2 OF 2 FOR DIODE BOARDS HAVING "L" TYPE TERMINALS

STORAGE ADDRESS REGISTER

HIGH ORDER X			LOW ORDER			HIGH ORDER Y			LOW ORDER			
3	4	5	6	7	8	9	10	11	12	13	14	15
WR DR, RD GT			WR GT-RD DR			WR DR, RD GT			WR GT-RD DR			

(NOTE XI)

TERMINATING RESISTORS

INTERNATIONAL BUSINESS MACHINES CORP.				DATE	CHANGE NO.	DATE	CHANGE NO.	NOTE	DEVELOPMENT NO.
NAME	SJ-2 6K DIODE BOARD SCHEMATIC			19AUG65	414258			X PRINT TO ENG. SPEC. NO.	
DESIGN		MODEL		18JAN67	730248				
DETAIL	LD 4JUN67			20FEB67	730723				
CHECK		DRAW		19OCT67	730727				
APPRO		CHECK		8FEB68	731675				SA081

219672

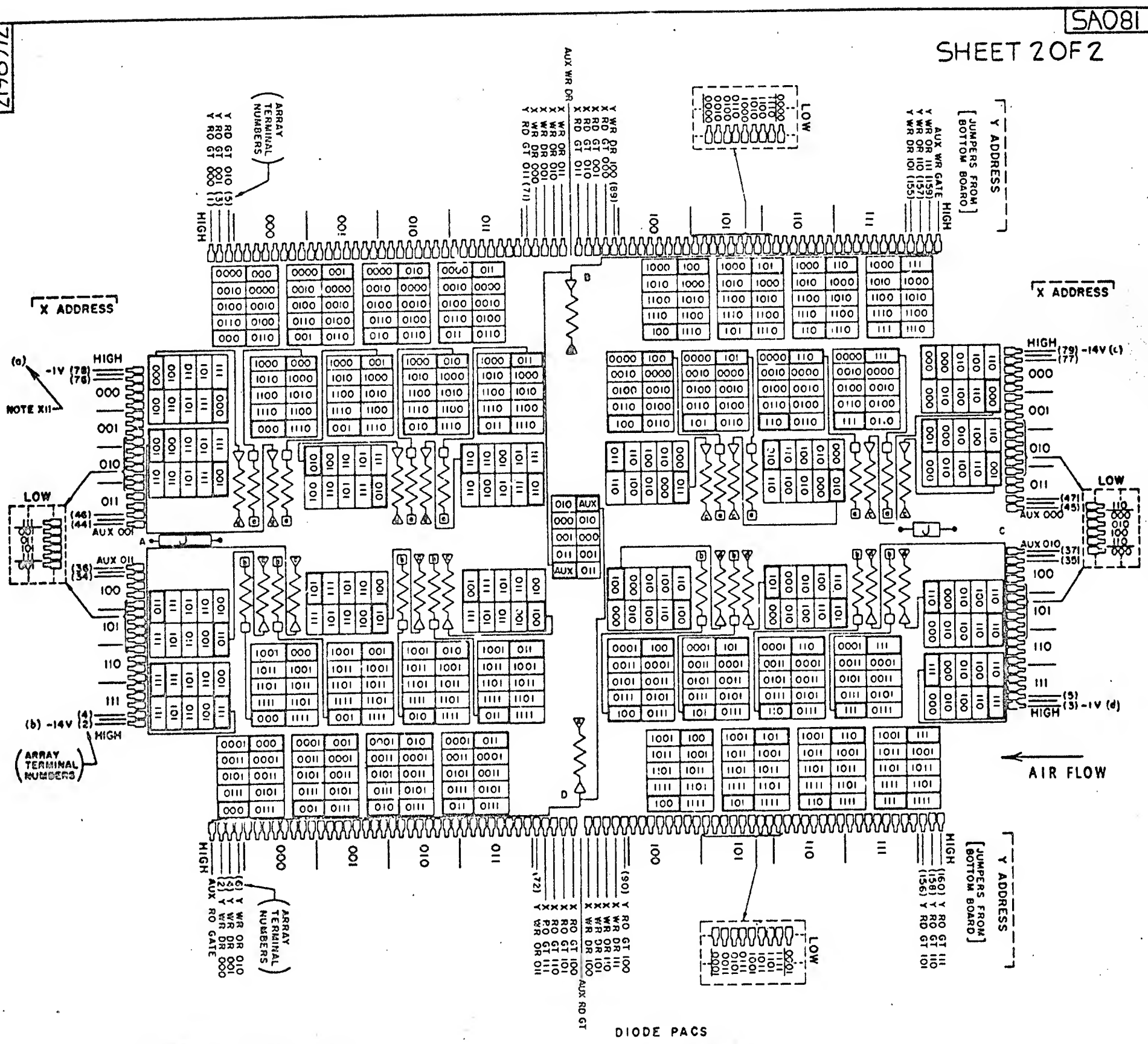
X ADDRESS
Y ADDRESS
[JUMPERS FROM BOTTOM BOARD]
ARRAY TERMINAL NUMBERS
HIGH
LOW
AUX WR DR
AUX WR GATE
NOTE XII
AIR FLOW
DIODE PACS
(a) -1V (78) (76)
(b) -14V (4) (2)
(c) -14V (79) (77)
(d) -1V (5) (3)
AUX 001 (46) (44)
AUX 011 (36) (34)
AUX 000 (47) (45)
AUX 010 (37) (35)
Y WR DR 000 (72)
X WR DR 000 (90)
X RD GT 000 (69)
X WR DR 000 (71)
Y WR OR 000 (6)
Y WR DR 000 (4)
Y WR OR 010 (2)
AUX RD GATE
AUX RD GT
Y WR DR
X RD GT
X WR OR
X WR DR
Y RD GT
Y WR OR
Y RD GT
X WR DR
X RD GT
Y WR OR
Y RD GT
X WR OR
X WR DR
Y WR OR
Y WR D

SHEET 1 OF 2

STORAGE ADDRESS REGISTER

X						Y					
HIGH ORDER			LOW ORDER			HIGH ORDER			LOW ORDER		
3	4	5	6	7	8	9	10	11	12	13	14	15
WR RO	OR GT		WR RD	GT-OR		WR RO	DR GT		WR RO		GT-OR	

NOTE X

DIODE PACS

DETAIL "A"

DETAIL "B"

X ADDRESS

Y ADDRESS

JUMPERS FROM BOTTOM BOARD

ARRAY TERMINAL NUMBERS

ARRAY Y LINE

ARRAY X LINE

Y WR DRIVER

X WR DRIVER

Y RD GATE

X RD GATE

NOTE XI

NOTE XII

AIR FLOW

TERMINATING RESISTORS 160Ω 82Ω 51Ω

DATE	EC NUMBER	DATE	EC NUMBER
19AUG65	414258		
18JAN67	730246		
20FEB67	730723		
20OCT67	731512		
9FEB68	731675		

SJ-2 4K 0100E BOARD

SCHEMATIC

DATE	19AUG65	P/N	2196973
		TYPE	

IBM SA082

2196973

SA-082

SHEET 2 OF 2

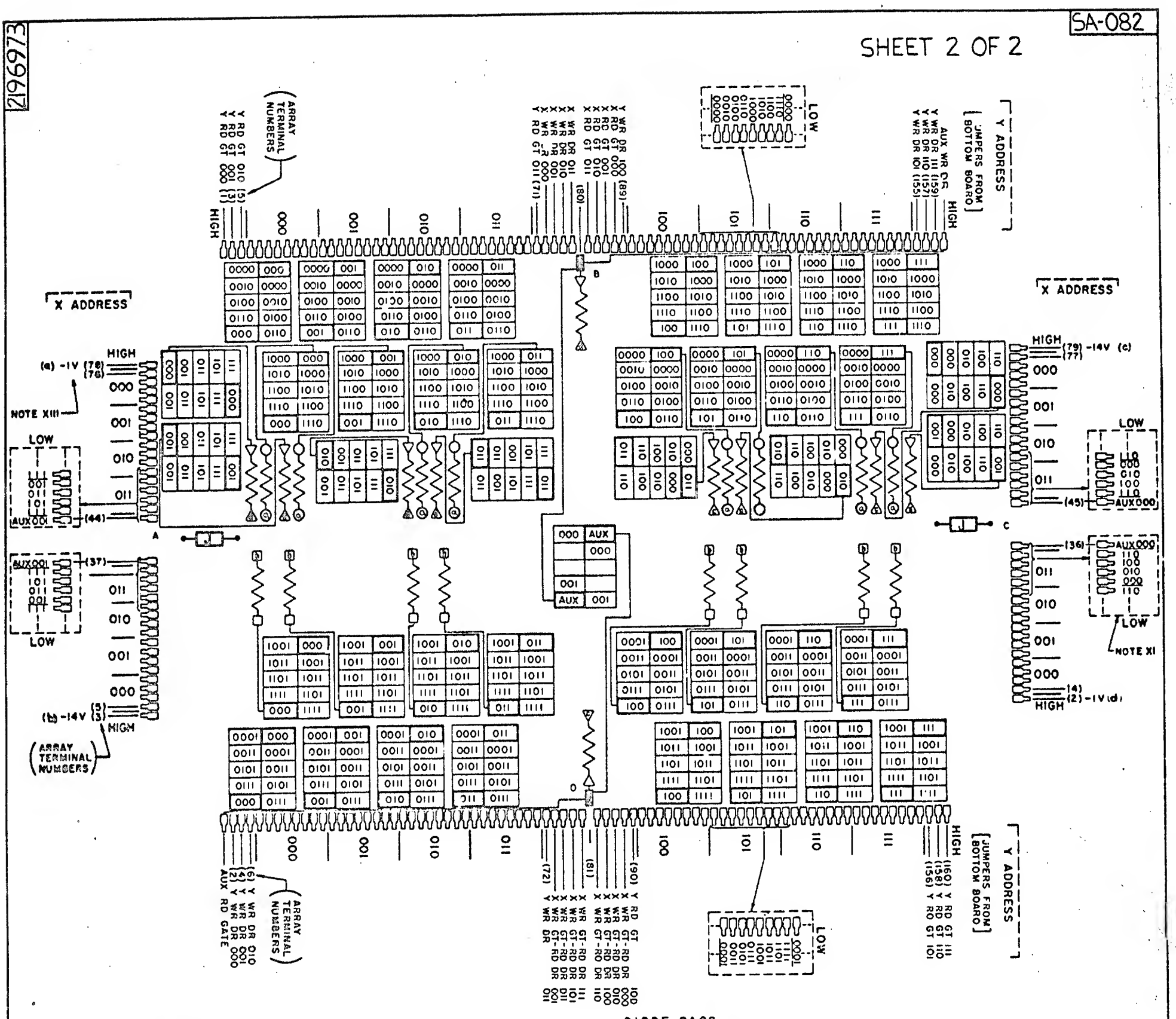

DIODE PACS

STORAGE ADDRESS REGISTER

X HIGH ORDER			X LOW ORDER			Y HIGH ORDER			Y LOW ORDER			
3	4	5	6	7	8	9	10	11	12	13	14	15
WR DR, RD GT			WR GT-RD DR			WR DR, RD GT			WR GT-RD DR			

(NOTE X)

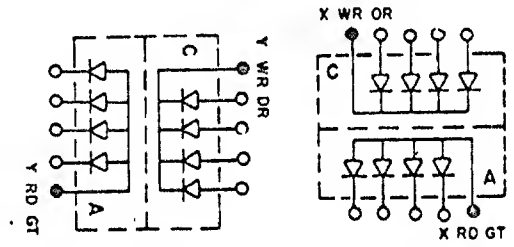

DETAIL "A"

DETAIL "B"

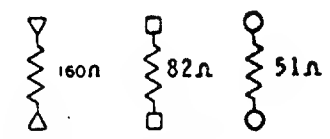

TERMINATING RESISTORS

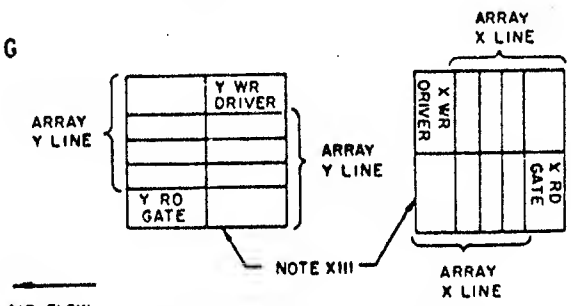

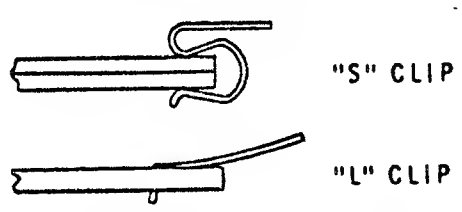

BOARD TERMINAL PROFILES - REF

AIR FLOW

NOTES

- X I TO LOCATE AN ARRAY LINE, USE THE HIGH AND LOW BINARY NOTATION OF THE STORAGE ADDRESS REGISTER AS SHOWN ON THIS PAGE
- X II THE X WR GT-RD DR (LOW ORDER X) COMMONING IS ON THE D HALF OF THE A AND C SIDES OF THE DIODE BOARD
- X III LEAST SIGNIFICATN ADDRESS BIT IS ON RIGHT FOR Y AND BOTTOM FOR X
- X IV LOWER CASE LETTERS DENOTE CONTINUITY BETWEEN RESISTORS AND APPROPRIATE TERM.
- X V USE SHEET 1 OF 2 FOR DIODE BOARDS HAVING "S" TYPE TERMINALS
- X VI USE SHEET 2 OF 2 FOR DIODE BOARDS HAVING "L" TYPE TERMINALS

INTERNATIONAL BUSINESS MACHINES CORP.					
NAME	SJ-2 4K DIODE BOARD SCHEMATIC				
DESIGN	RG		MODEL		
DETAIL					
CHECK			DRAW	KE	28MAR67
APPRO			CHECK		

DATE	CHANGE NO.	DATE	CHANGE NO.
19AUG65	414258		
18JAN67	730246		
20FEB67	730723		
19OCT67	731512		
8FEB68	731675		

NOTE
X PRINT TO ENG. SPEC. NO.

DEVELOPMENT NO.

SA-082

2196973

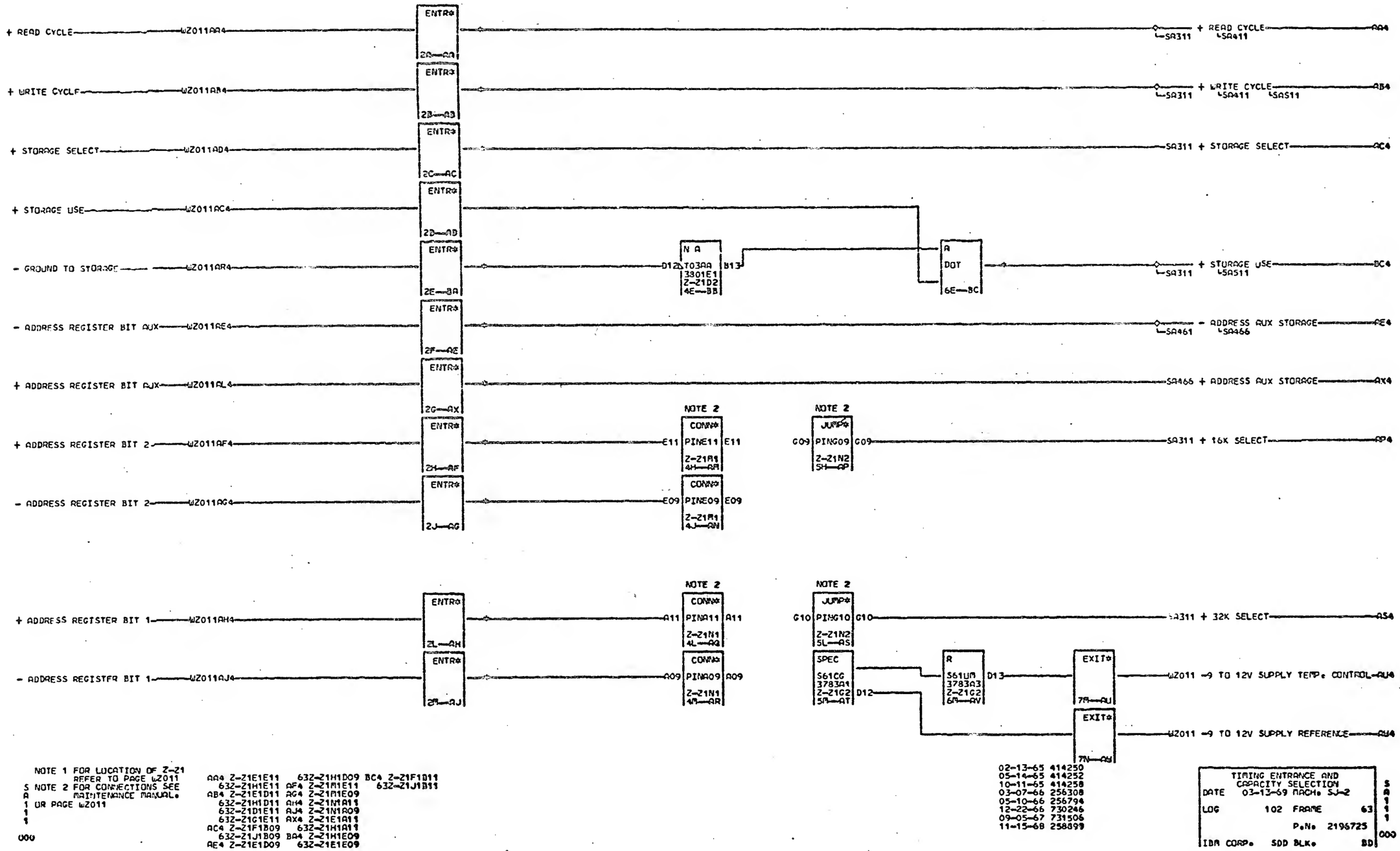

NOTE 1 FOR LOCATION OF Z-Z1 REFER TO PAGE WZ011
NOTE 2 FOR CONNECTIONS SEE MAINTENANCE MANUAL. OR PAGE WZ011

AA4 Z-Z1E1E11 63Z-Z1H1D09 BC4 Z-Z1F1B11
63Z-Z1H1E11 AF4 Z-Z1A1E11 63Z-Z1J1B11
AB4 Z-Z1E1D11 AG4 Z-Z1A1E09
63Z-Z1H1D11 AH4 Z-Z1N1A11
63Z-Z1D1E11 AJ4 Z-Z1N1A09
63Z-Z1G1E11 AX4 Z-Z1E1A11
AC4 Z-Z1F1B09 63Z-Z1H1A11
63Z-Z1J1B09 BA4 Z-Z1H1E09
AE4 Z-Z1E1D09 63Z-Z1E1E09

02-13-65 414250
05-14-65 414252
10-11-65 414258
03-07-66 256308
05-10-66 256794
12-22-66 730246
09-05-67 731506
11-15-68 258899

TIMING ENTRANCE AND CAPACITY SELECTION
DATE 03-13-69 MACH. SJ-2
LOG 102 FRAME 63
P.N. 2196725
IBM CORP. SDD BLK. BD

SA111 000

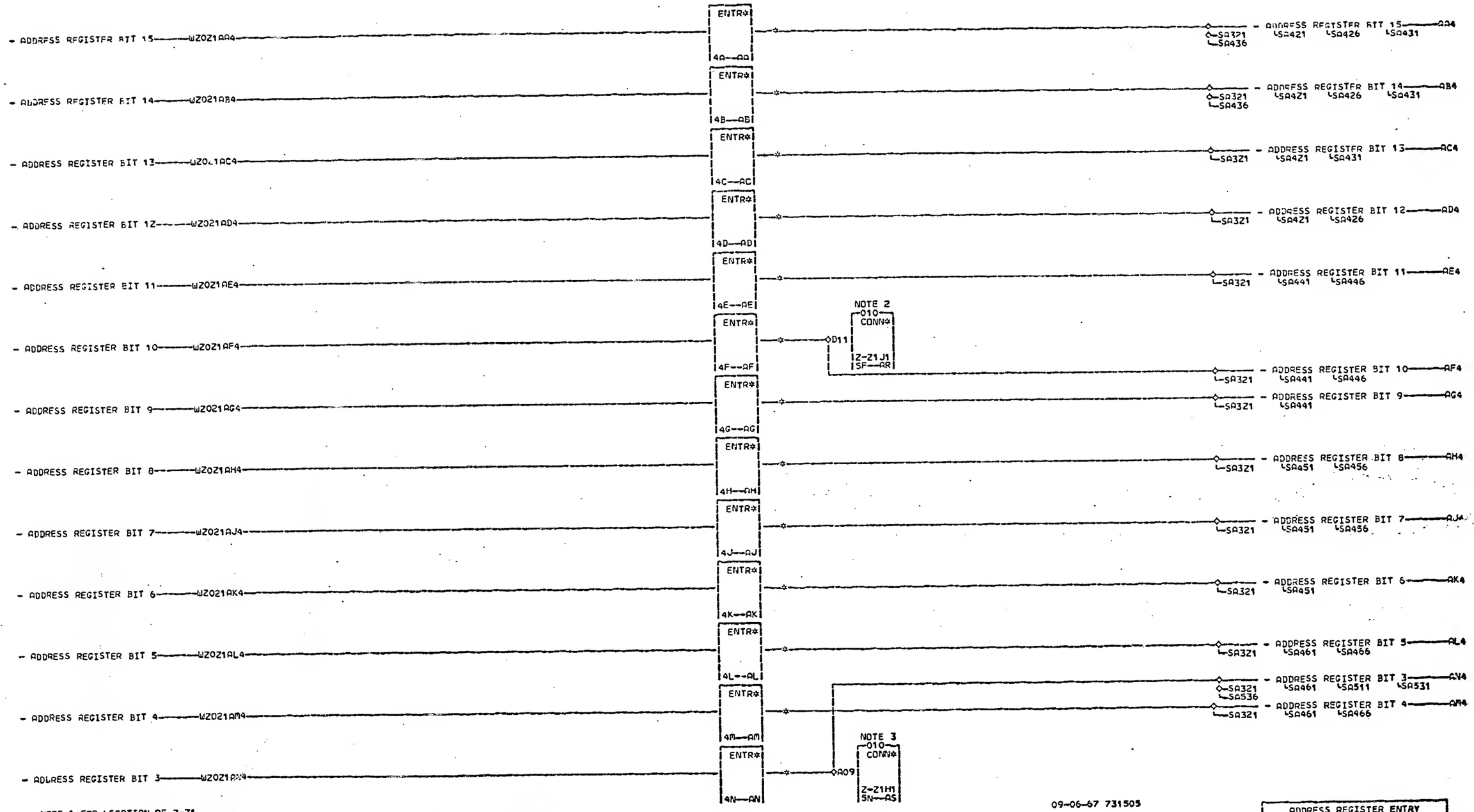

NOTE 1 FOR LOCATION OF Z-Z1 REFER TO PAGE WZ011

NOTE 2 SYSTEM MAY REMOVE H3B07 TO J1D11 REFER TO WZ021

NOTE 3 SYSTEM MAY REMOVE K3B02 TO H1A09 REFER TO WZ021

SIM TO PN 2196720 EC 731506

AA4 Z-Z1G1A09	63Z-Z1J1D09	AJ4 Z-Z1E1C09	63Z-Z1D1E09
63Z-Z1K1A09	AF4 Z-Z1F1D11	63Z-Z1H1C09	63Z-Z1G1E09
AB4 Z-Z1G1A11	63Z-Z1F1A11	AK4 Z-Z1E1C11	63Z-Z1H1A09
63Z-Z1K1A11	63Z-Z1J1A11	63Z-Z1H1C11	
AC4 Z-Z1F1E09	63Z-Z1J1D11	AL4 Z-Z1E1B09	
63Z-Z1J1E09	AG4 Z-Z1F1C09	63Z-Z1H1B09	
AD4 Z-Z1F1E11	63Z-Z1J1C09	AM4 Z-Z1E1B11	
63Z-Z1J1E11	AH4 Z-Z1F1C11	63Z-Z1H1B11	
AE4 Z-Z1F1D09	63Z-Z1J1C11	AN4 Z-Z1E1A09	

09-06-67 731505

ADDRESS REGISTER ENTRY

DATE 09-06-67 MACH. SJ-2

LOG 249R FPAME 63

P.N. 2510237

IBM CORP. SDD BLK. SA

SA121 010

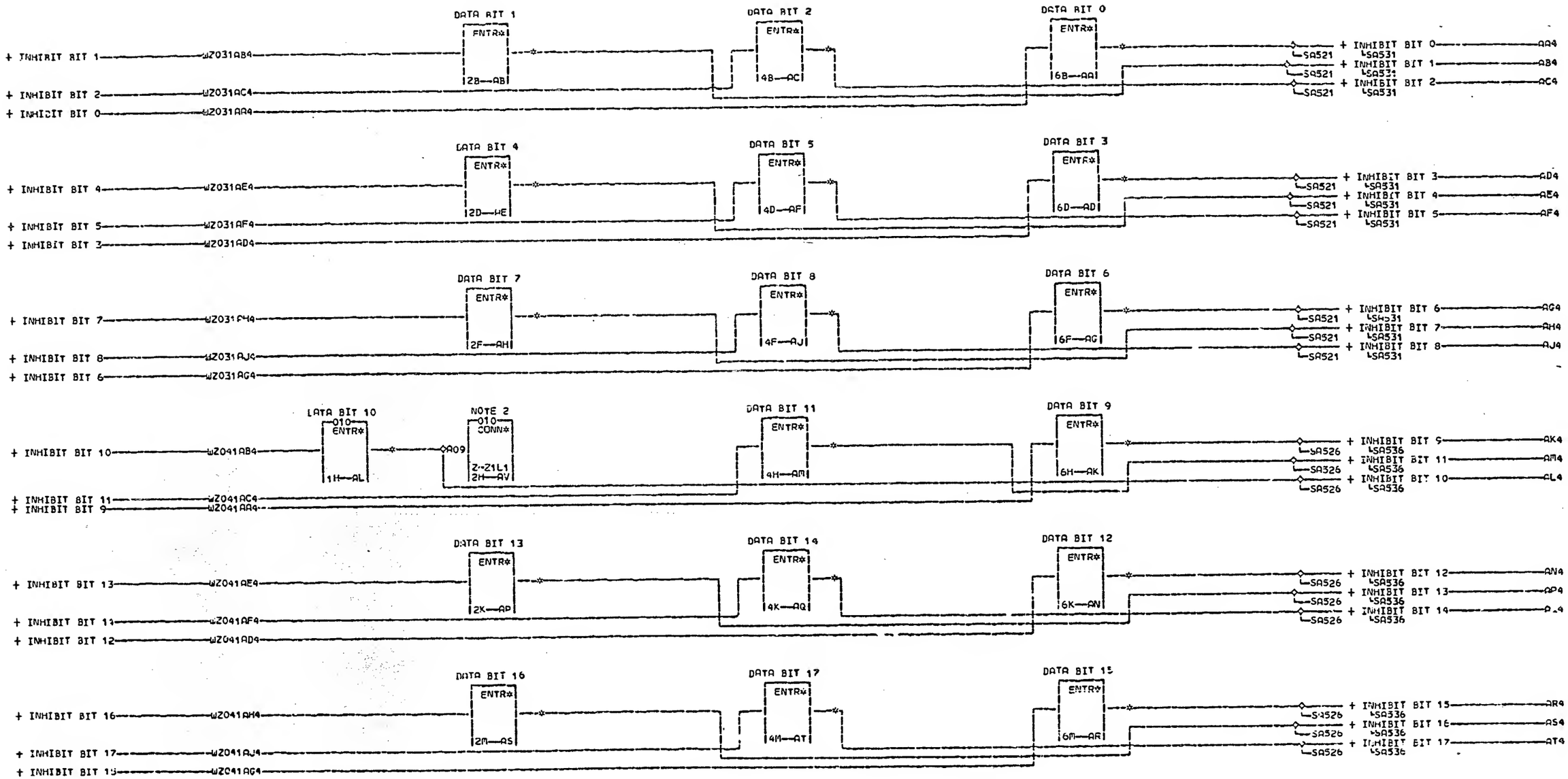

NOTE 1 FOR LOCATION OF Z-Z1
REFER TO PAGE WZ011

S NOTE 2 SYSTEM MAY REMOVE L1A09
A TO M2D10 REFER TO WZ041
1
3
1

010
SIM TO FN 2196727 EC 73150c

AA4 Z-Z1B1A09 AJ4 Z-Z1C1E09 AS4 Z-Z1M1C09
63Z-Z1A1E09 AK4 Z-Z1D1A09 AT4 Z-Z1M1D09
AB4 Z-Z1B1B09 AL4 Z-Z1K1E09
AC4 Z-Z1B1C09 63Z-Z1L1A09
AD4 Z-Z1B1D09 AM4 Z-Z1L1B09
AE4 Z-Z1B1E09 AN4 Z-Z1L1C09
AF4 Z-Z1C1B09 AP4 Z-Z1L1D09
AG4 Z-Z1C1C09 AQ4 Z-Z1L1E09
AH4 Z-Z1C1D09 AR4 Z-Z1M1B09

09-06-67 731505

26

DATA BIT ENTRY		
DATE 09-06-67 MACH. SJ-2		SA 131
LOG 2498 FRAME 53		
P.N. 2510239		010
IBM CORP. SDD BLK.	SA	

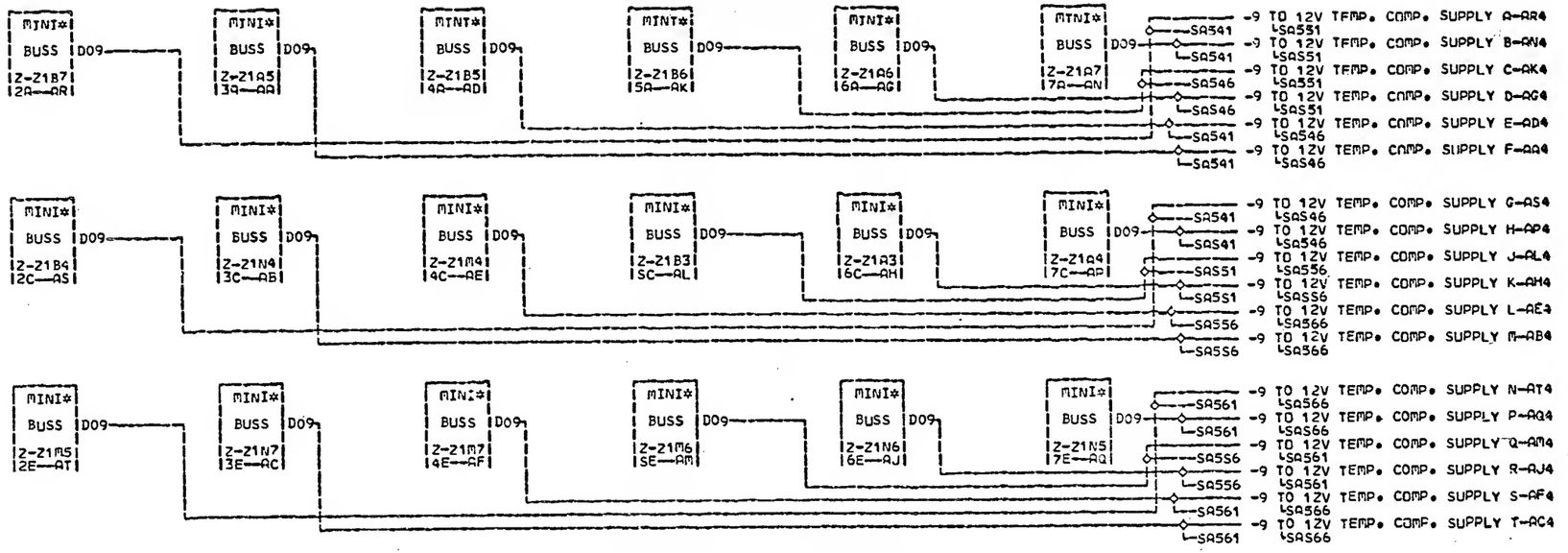

NOTE 1 FOR LOCATION OF Z-Z1
REFER TO PAGE WZ011

SA211T

000

02-13-65 414250
05-14-65 414252
09-05-67 731506

INHIBIT VOLTAGE DISTRIBUTION			SA2111 000
DATE 09-12-67	MACH. SJ-2		
LOG 248Q	FRAME	63	
	P.N. 2196728		
IBM CORP. SDD BLK.		CC	

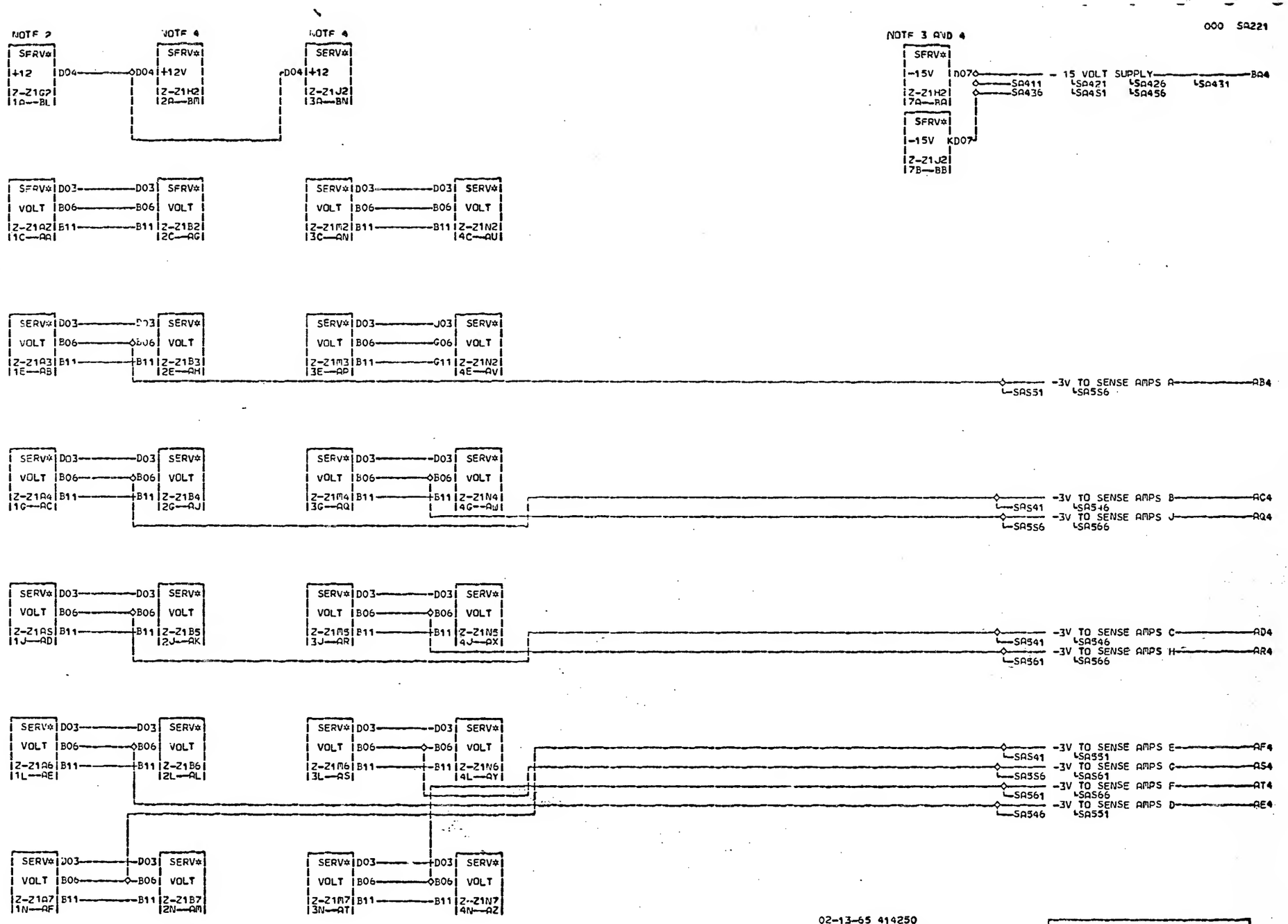

NOTE 1 FOR LOCATION OF Z-Z1 REFER TO PAGE WZ011
S NOTE 2 +12V ENTERS AT G2D04 OR J2D04
A
2 NOTE 3 -15Y ENTERS AT C3B13 OR M3B13.
2
1 NOTE 4 EARLIER LEVELS MAY HAVE MINI-BUSSES INSTEAD OF WIRE.
000

02-13-65 414250
05-14-65 414252
12-22-66 730246
07-18-67 731506

VOLTAGE DISTRIBUTION
DATE 09-12-67 MACH. SJ-2
LOG 199F FRAME 63
P.N. 2196732
IBM CORP. SDD BLK. BP

SA221 000

000 SA311

+ READ CYCLE — SA111AR4

+ 16K SELECT — SA111AP4

+ 32K SELECT — SA111AS4

+ WRITE CYCLE — SA111AB4

+ STORAGE SELECT — SA111AC4

+ STORAGE USE — SA111BC4

SA411 + LONG TIME — AE4

SA511 + INHIBIT LATCH — AX4

SA411 + SHORT TIME — AQ4

SA511 + STROBE POINT — AP4

SA511 - SENSE AMP GATE OFF — AF0

X WRITE GATE TIME — SA456 — AR2

X READ DRIVER TIME — SA456 — AR6

Y WRITE GATE TIME — SA426 SA431 SA436 — AT2

Y READ DRIVER TIME — SA426 SA431 SA436 — AT6

LONG TIME

LATCH

INHIBIT TIME

LATCH

SHORT TIME

LATCH

1 US

NOTE 2

NOTE 2

1000HM TERM

NOTE 3

NOTE 1 FOR LOCATION OF Z-Z1 REFER TO PAGE WZ011

S NOTE 2 FOR STRUBE ADJUSTMENT
A REFER TO SA022.
3
1 NOTE 3 SYSTEM MAY PROVIDE
1 GROUND LEVEL TO INHIBIT STROBE REFER TO WZ011

000

02-13-65 414250
05-14-65 414252
10-11-65 414258
05-10-66 256794
12-22-66 730246
09-05-67 731506

29

TIMING		S
DATE 09-12-67 MACH. SJ-2		A
LOG 2480 FRAME	±3	3
P.N. 2196729		1
IBM CORP. SDD BLK.	BC	1
		000

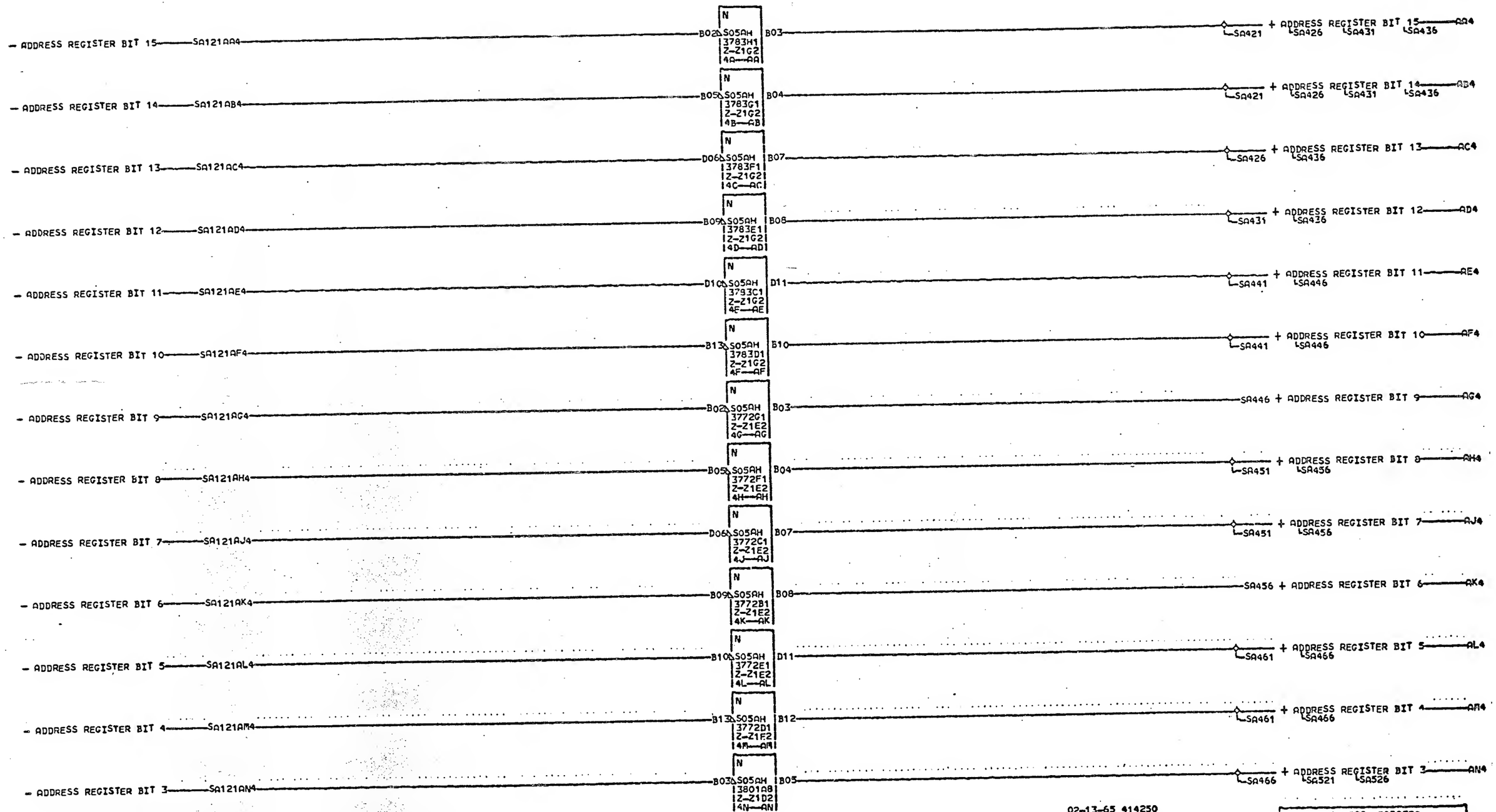

NOTE. FOR LOCATION OF Z-Z1 REFER TO PAGE WZ011

SA121 000

02-13-65 414250
05-14-65 414252
10-11-65 414258

ADDRESS REGISTER INVERSION
DATE 07-12-66 MACH. SJ-2
LOG 287K FRAME 63
P.N. 2196730
IBM CORP. SDD BLK. AP

SA321 000

SPEC
T25SD XD02 — +.8 DRIVER-GATE VOLTAGE — AA4
378331 — SA421 SA426 SA431 SA436
Z-21G2 — SA441 SA446 SA451 SA456
7A — AA — SA461 SA466

+ READ CYCLE — SA111AA4 — D04 A T03AF B07 3768A3 Z-Z1K2 3C — AG — B03 *SPEC XE10 — X READ GATE TIME — AR2 (SA461 SA466)
+ LONG TIME — SA311AE4 — B12 Z-Z1K2 3C — AG — B02X8196A1 Z-Z1J2 6C — AB — S40UC XD09 — X READ SOURCE — AB4 (SA461 SA466)
B12 A T03AF B13 3768A4 Z-Z1K2 3D — AH — D02 *SPEC XE12 — X WRITE DRIVER TIME — AC2 (SA461 SA466)
+ WRITE CYCLE — SA111AE4 — B10 Z-Z1K2 3D — AH — B02X8196A2 Z-Z1J2 6D — AC — S40LL XD06 — X WRITE SINK — AC4 (SA461 SA466)

NOTE 2 V-REF
SPEC
D07XS40WE XB12
3783A2
Z-Z1G2
5E — AF

D04 A T03AF B02 3768A1 Z-Z1K2 3F — AJ — B03 *SPEC XB10 — Y READ GATE TIME — AD2 (SA441 SA446)
+ SHORT TIME — SA311AQ4 — B04 Z-Z1K2 3F — AJ — B02X8196A1 Z-Z1H2 6F — AD — S40UC XD09 — Y READ SOURCE — AD4 (SA441 SA446)
B04 A T03AF B02 3768A2 Z-Z1K2 3G — AK — D02 *SPEC XB12 — Y WRITE DRIVER TIME — AE2 (SA441 SA446)
B10 Z-Z1K2 3G — AK — B02X8196A2 Z-Z1H2 6G — AE — S40LL XD06 — Y WRITE SINK — AE4 (SA441 SA446)

— 15 VOLT SUPPLY — SA221BQ4

X TERM. -14V
*CONN
B04 — CORE Z-Z1F4 3J — AL — E10 *JUMP* BLOCK Z-Z1F4 5J — AR

X TERM. -1V
*CONN
B04 — CORE Z-Z1H4 4K — AM — B10 *JUMP* BLOCK Z-Z1H4 5K — AS

LIM XD06
D07XS25SN
376881
Z-Z1K2XB09
2L — AQ

Y TERM. -14V
*CONN
B04 — CORE Z-Z1H7 3M — AN — B10 *JUMP* BLOCK Z-Z1H7 5M — AT

Y TERM. -1V
*CONN
B04 — CORE Z-Z1F7 4N — AP — B10 *JUMP* BLOCK Z-Z1F7 5N — AU

ARRAY*
6L — AV

*NOTE 1 FOR LOCATION OF Z-Z1 REFER TO PAGE WZ011
S NOTE 2 FOR V-REF ADJUSTMENT
R REFER TO SA022.
4
1
1
000

02-13-65 414250
05-14-65 414252
10-11-65 414258
12-22-66 730246
09-05-67 731506

CURRENT SOURCE AND SINK
DATE 09-12-67 MACH. SJ-2
LOG 248W FRAME 63
P.N. 2196731
IBM CORP. SDD BLK. AU

S R 4 1 1 000

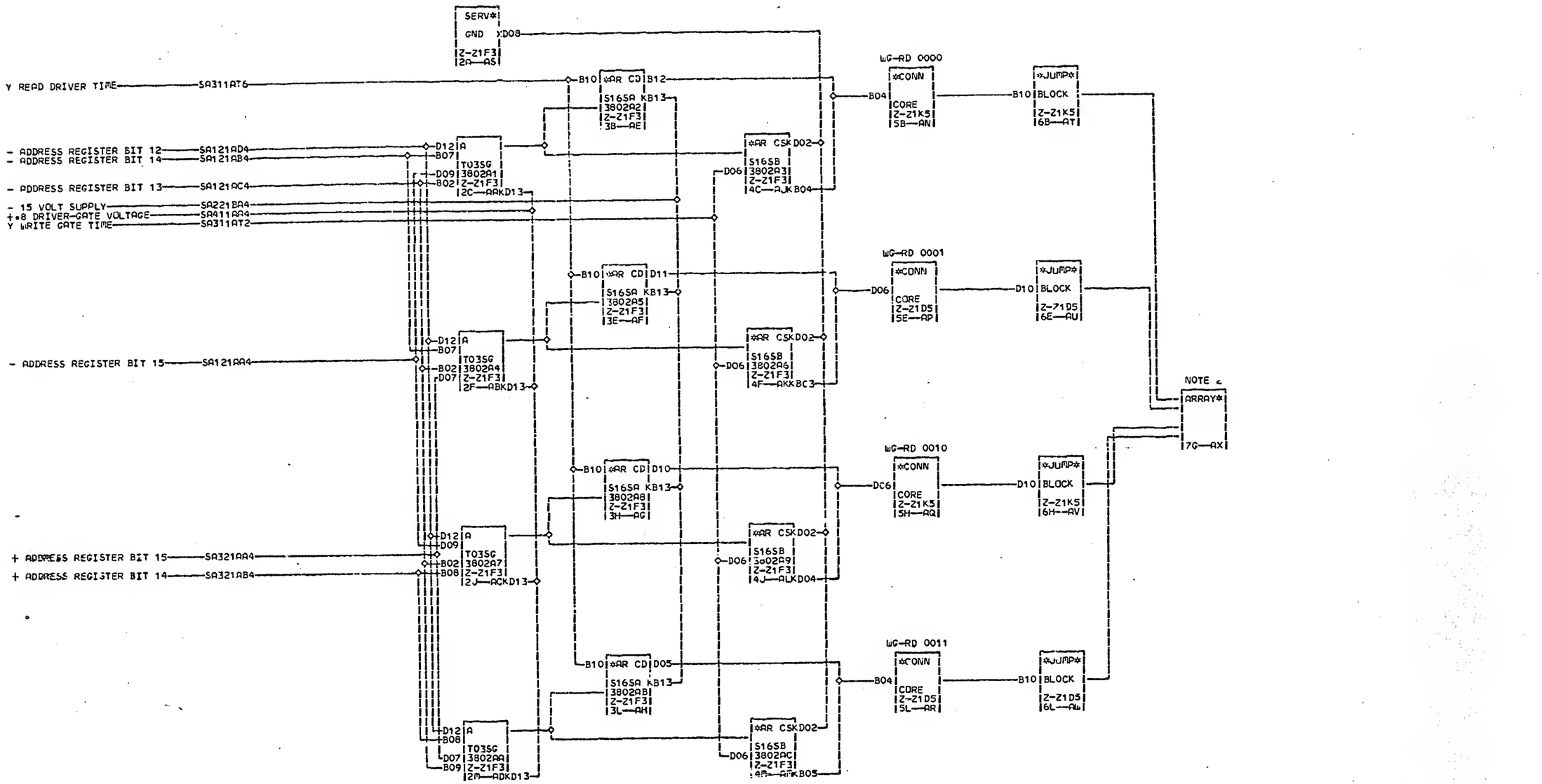

NOTE 1 FOR LOCATION OF Z-Z1
REFER TO PAGE WZ011
NOTE 2 REFER TO SA0710 SA0720
SA0810 AND SA092 FOR
CONNECTIONS TO ARRAY
BOTTOM AND DIODE
BOARDS.

000

02-13-65 414250
05-14-65 414252
10-11-65 414258
12-22-66 730245

Y HALF SELECT DRIVE LOW ORDER
WRITE GATE AND READ DRIVER
DATE 01-20-67 MACH. SJ-2
LOG 002 FRAME 63
P.N. 2196733
IBM CORP. SDD BLK. AV

SA421 000

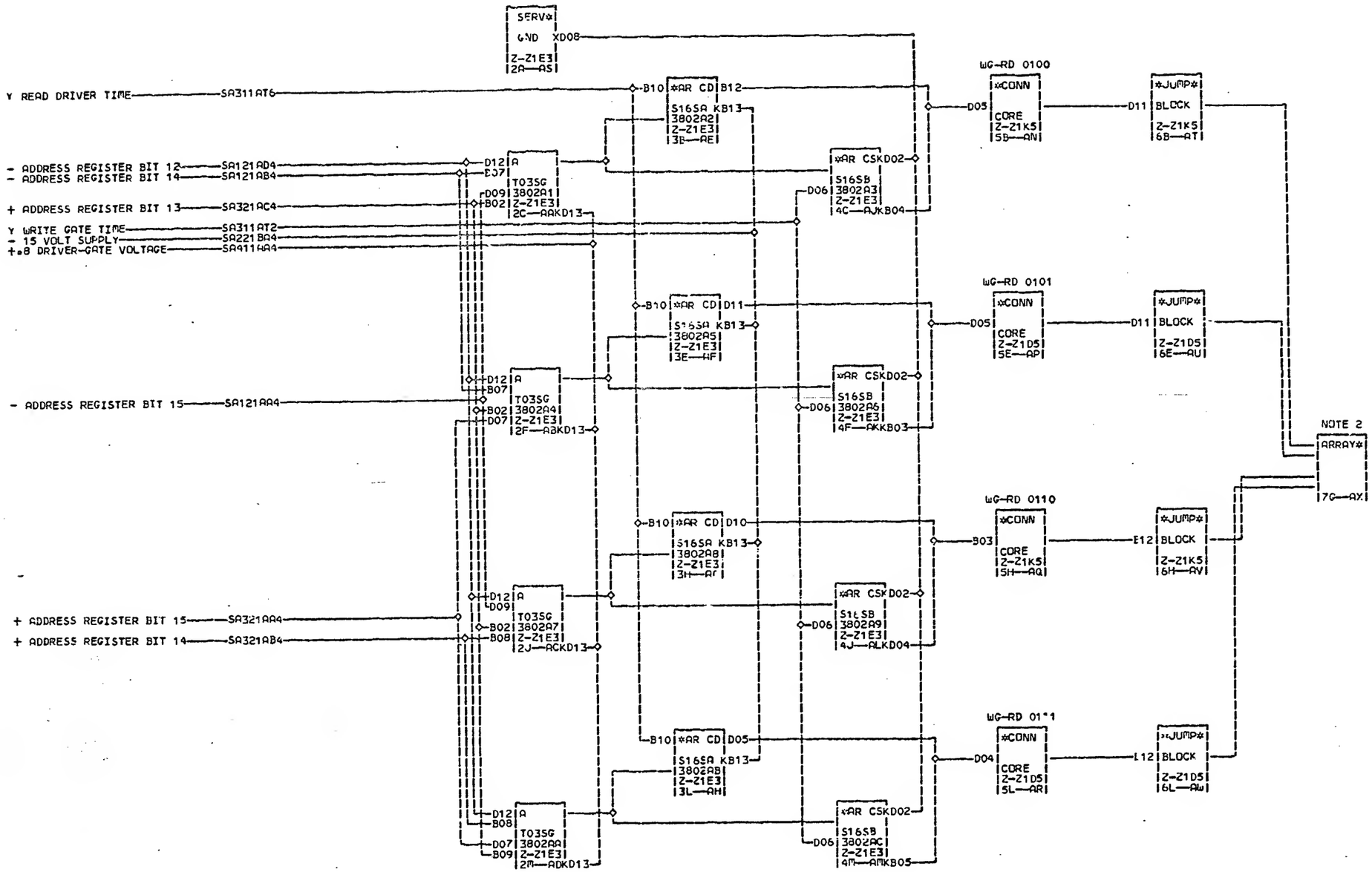

NOTE 1 FOR LOCATION OF Z-Z1 REFER TO PAGE WZ011

NOTE 2 REFER TO SA0710 SA0720 SA0810 AND SA082 FOR CONNECTIONS TO ARRAY BOTTOM AND DIODE BOARDS.

000

02-13-65 414250
05-14-65 414252
10-11-65 414258
12-22-66 730246

Y HALF SELECT DRIVE LOW ORDER WRITE GATE AND READ DRIVER				S A 4 2 6
DATE 01-20-67 MACH. SJ-2				
LOG	002	FRAME	63	
		P.N.	2196734	000
IBM CORP.	SDD BLK.		AY	

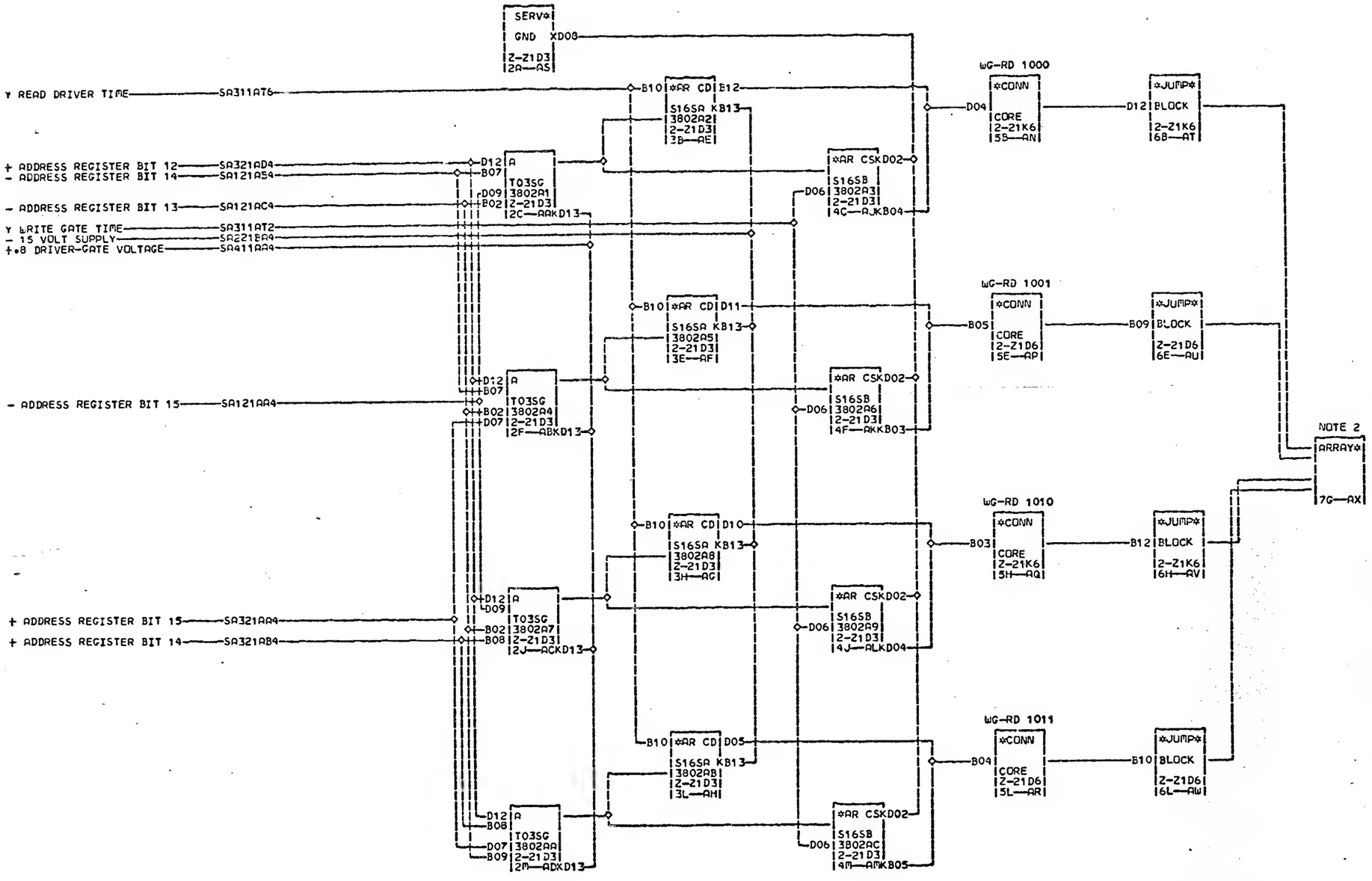

NOTE 1 FOR LOCATION OF Z-Z1 REFER TO PAGE W2011

NOTE 2 REFER TO SA0710 SA0720 SA0810 AND SA082 FOR CONNECTIONS TO ARRAY BOTTOM AND DIODE BOARDS.

02-13-65 414250
05-14-65 414252
10-11-65 414258
12-22-66 730246

Y HALF SELECT DRIVE LOW ORDER
WRITE GATE READ DRIVER
DATE 01-20-67 MACH. SJ-2

LOG 002 FRAME 63

P.N. 2196735

IBM CORP. SDD BLK. AY

SA431 000

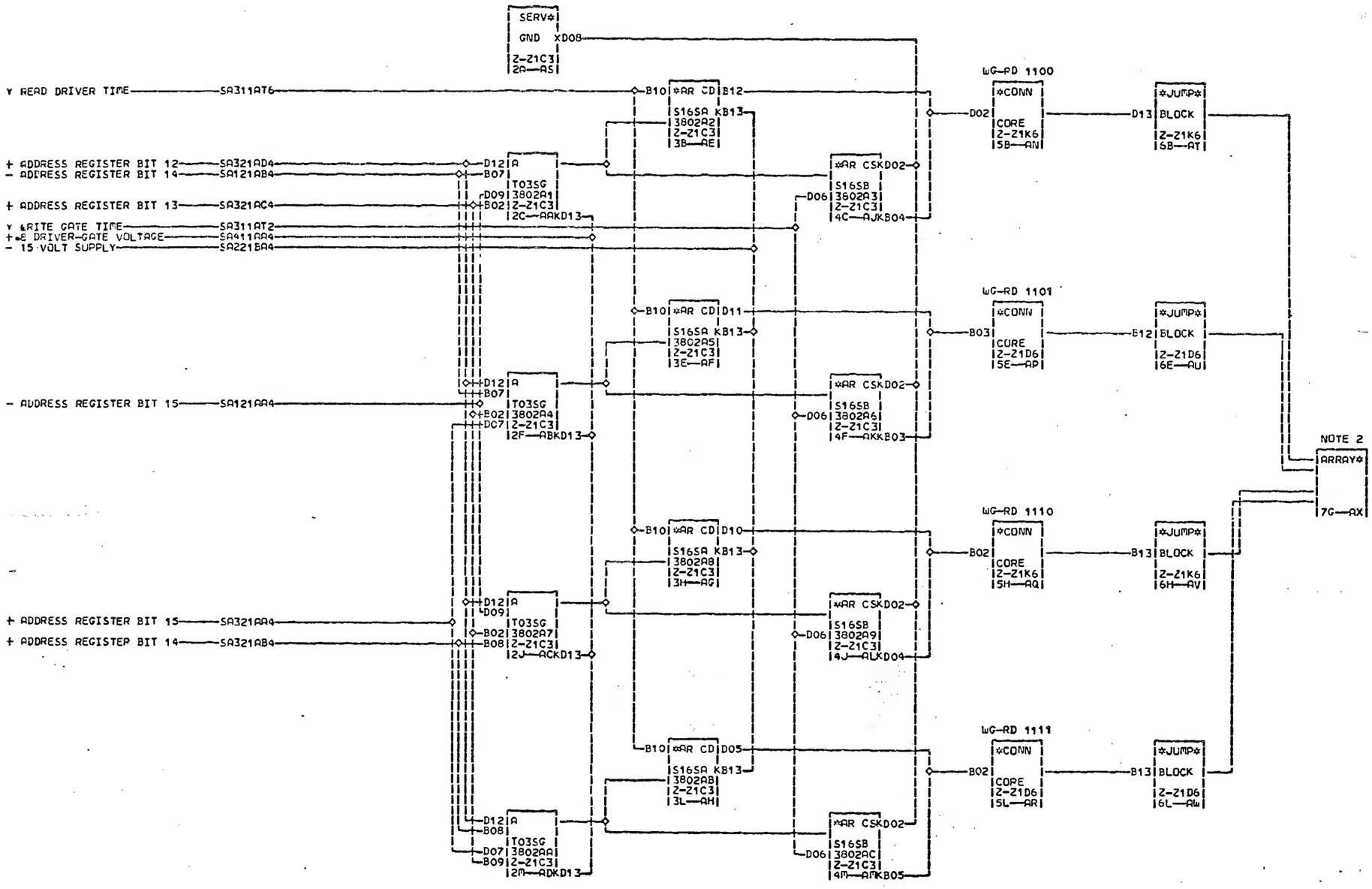

NOTE 1 FOR LOCATION OF Z-Z1 REFER TO PAGE W2011

NOTE 2 REFER TO SA0710 SA0720 SA0810 AND SA082 FOR CONNECTIONS TO ARRAY BOTTOM AND DIODE BOARDS.

02-13-65 414250
05-14-65 414252
10-11-65 414258
12-22-66 730246

Y HALF SELECT DRIVE LOW ORDER
WRITE GATE READ DRIVER
DATE 01-20-67 MACH. SJ-2
LOG 002 FRAME 63
P.N. 2196736
IBM CORP. SDD BLK. AY

SA436 000

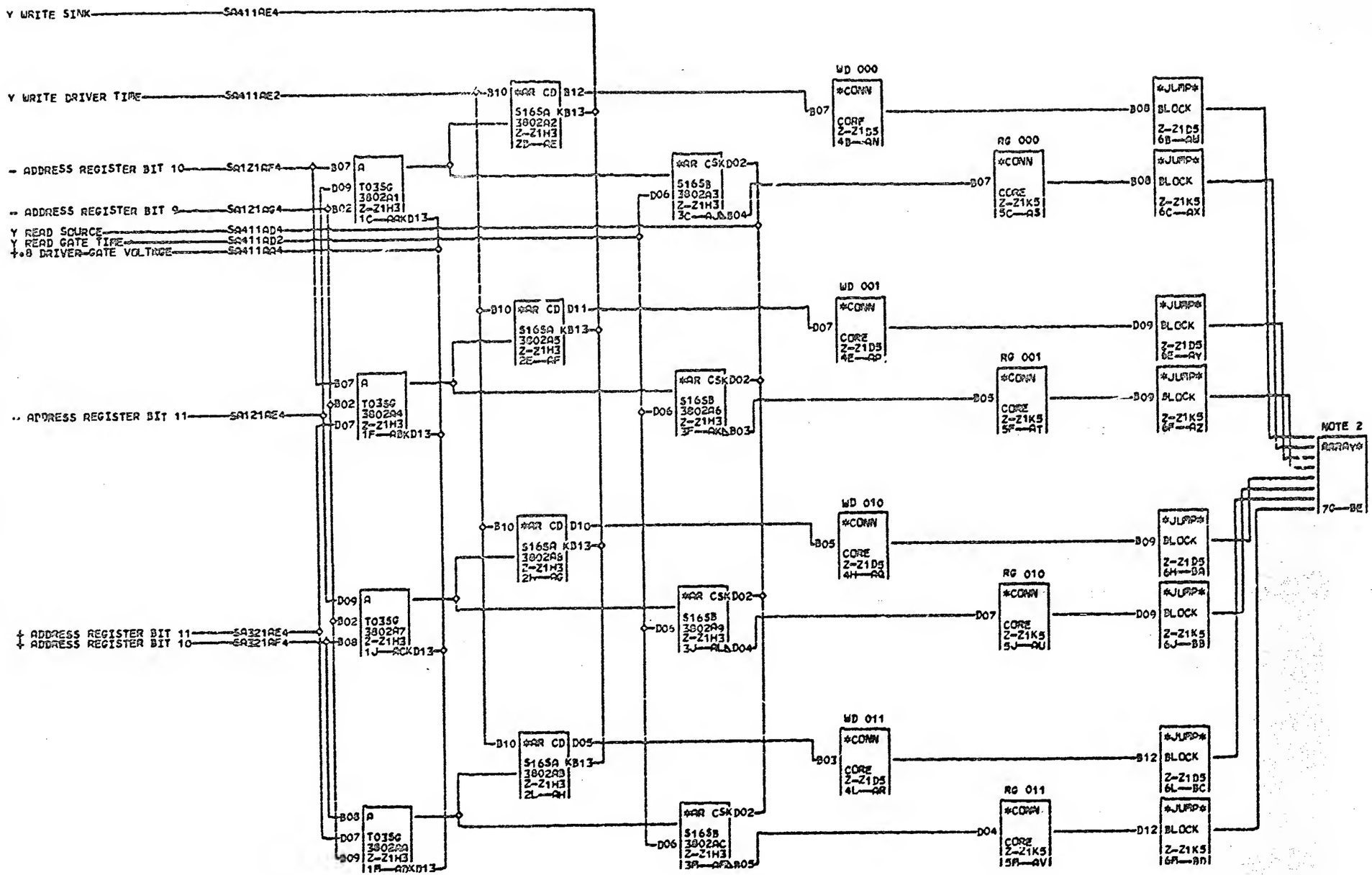

NOTE 1 FOR LOCATION OF Z-Z1
REFER TO PAGE W2011

S NOTE 2 REFER TO SA0710 SA0720
A SA0810 AND SA0820 FOR
4 CONNECTIONS TO ARRAY
4 BOTTOM AND DIODE
1 BOARDS.

009

02-13-65 414250
05-14-65 414252
10-11-65 414258

36

Y HALF SELECT DRIVE HIGH ORDER READ GATE WRITE DRIVER		S
DATE 07-12-66 MACH. SJ-2		A
LOG 2948 FRAME	63	4
		4
P.N. 2196737		1
IBM CORP. SDD BLK.	BF	000

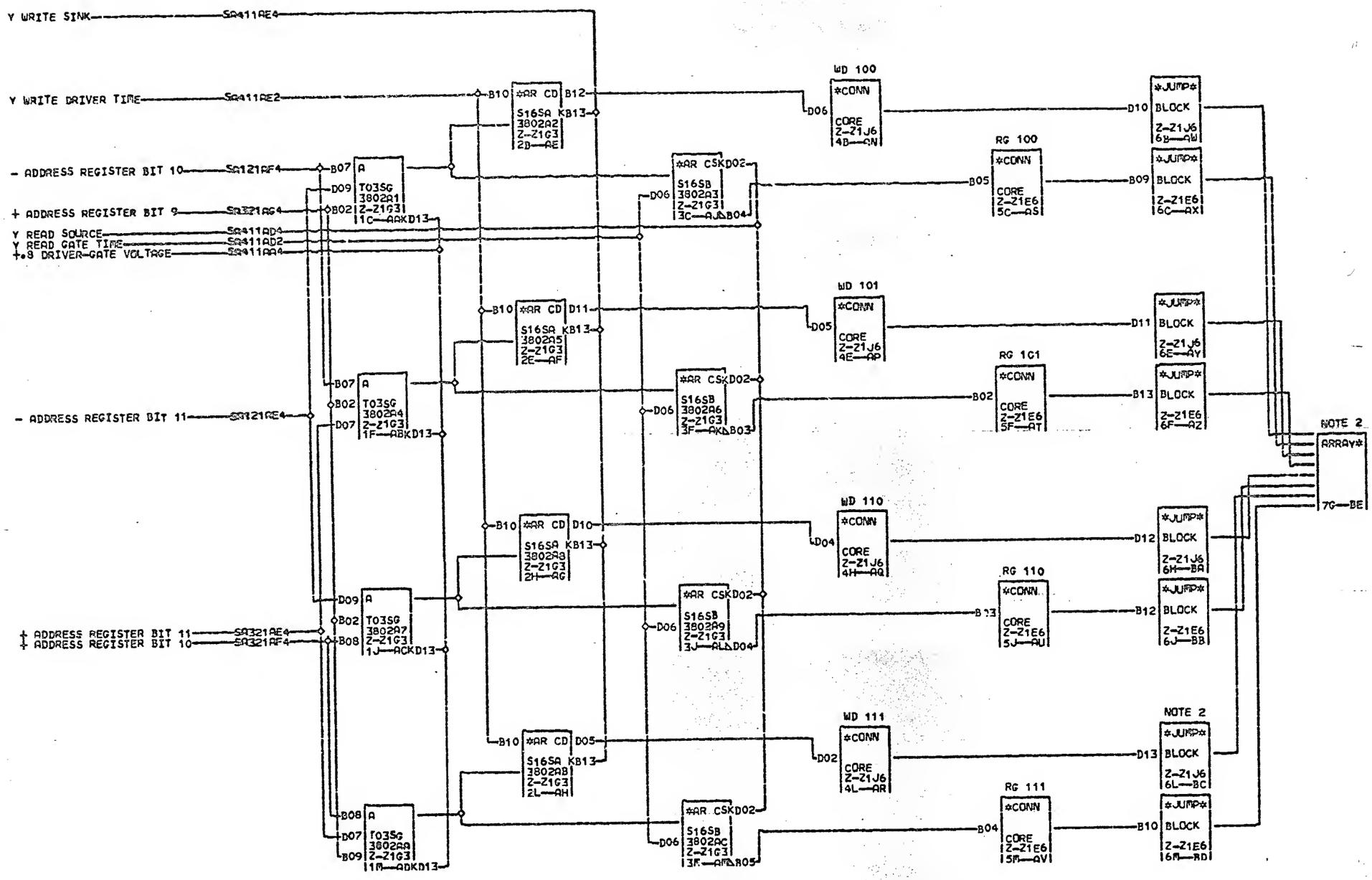

NOTE 1 FOR LOCATION OF Z-Z1 REFER TO PAGE WZ011

S NOTE 2 REFER TO SA071◇ SA072◇ SA081◇ AND SA082 FOR CONNECTIONS TO ARRAY BOTTOM AND DIODE BOARDS.

A 4 4 6

000

02-13-65 414250
05-14-65 414252
10-11-65 414258

37

Y HALF SELECT DRIVE HIGH ORDER
READ GATE WRITE DRIVER
DATE 07-12-66 MACH. 5J-2

LOG 2948 FRAME 63

P.N. 2196738

IBM CORP. SDD BLK. 2F

S A 4 4 6 000

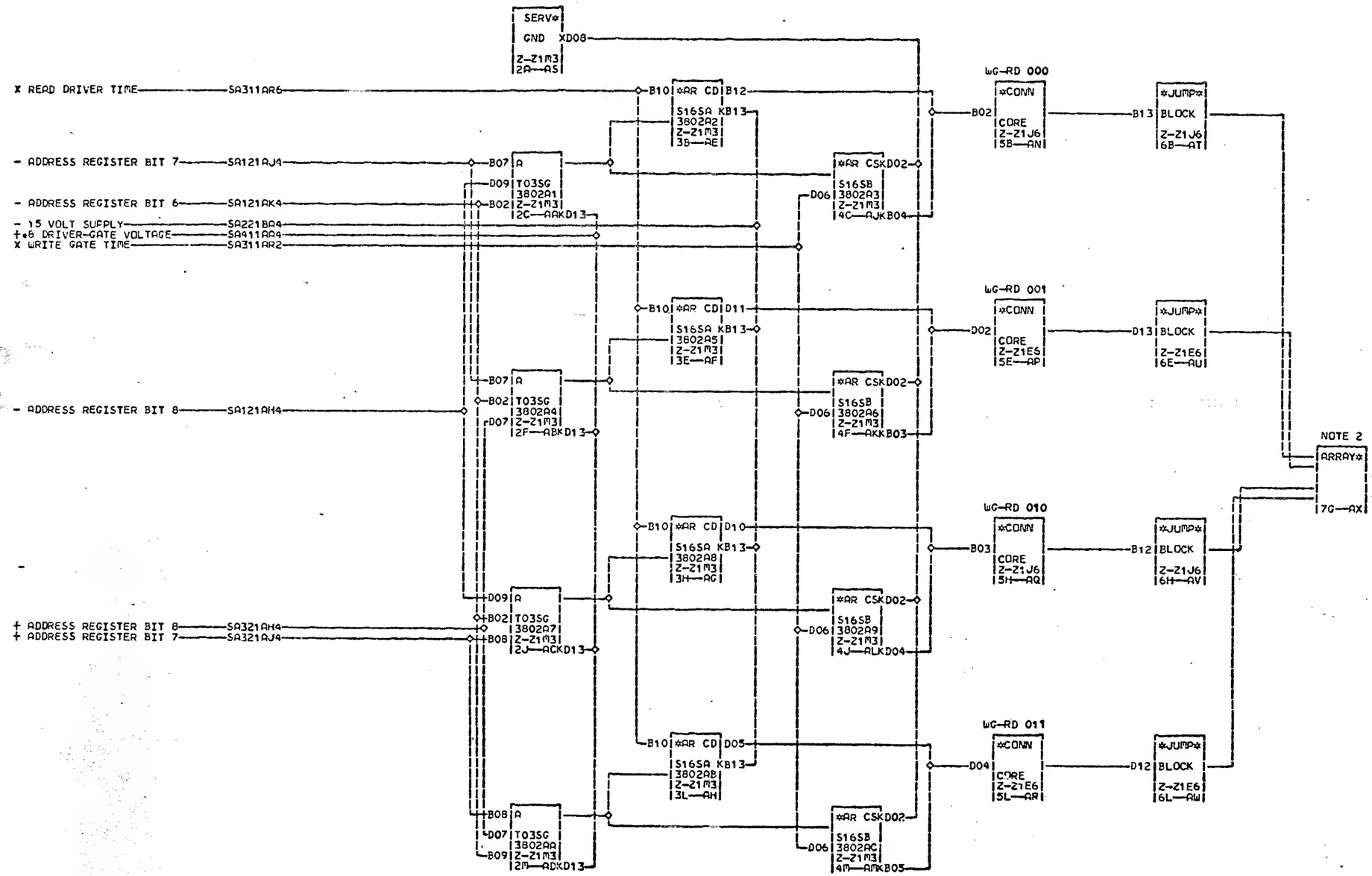

NOTE 1 FOR LOCATION OF Z-Z1
REFER TO PAGE WZ011

5 NOTE 2 REFER TO SA071◊ SA072◊
A SA081◊ AND SA082 FOR
4 CONNECTIONS TO ARRAY
5 BOTTOM AND DIODE
1 BOARDS.

000

02-13-65 414250
05-14-65 414252
10-11-65 414258
12-22-66 730246

X HALF SELECT DRIVE LOW ORDER WRITE GATE AND READ DRIVER
DATE 01-20-67 MACH. SJ-2

LOG 002 FRAME 63

P.N. 2196739

IBM CORP. SDD BLK. AY

SA451 1 000

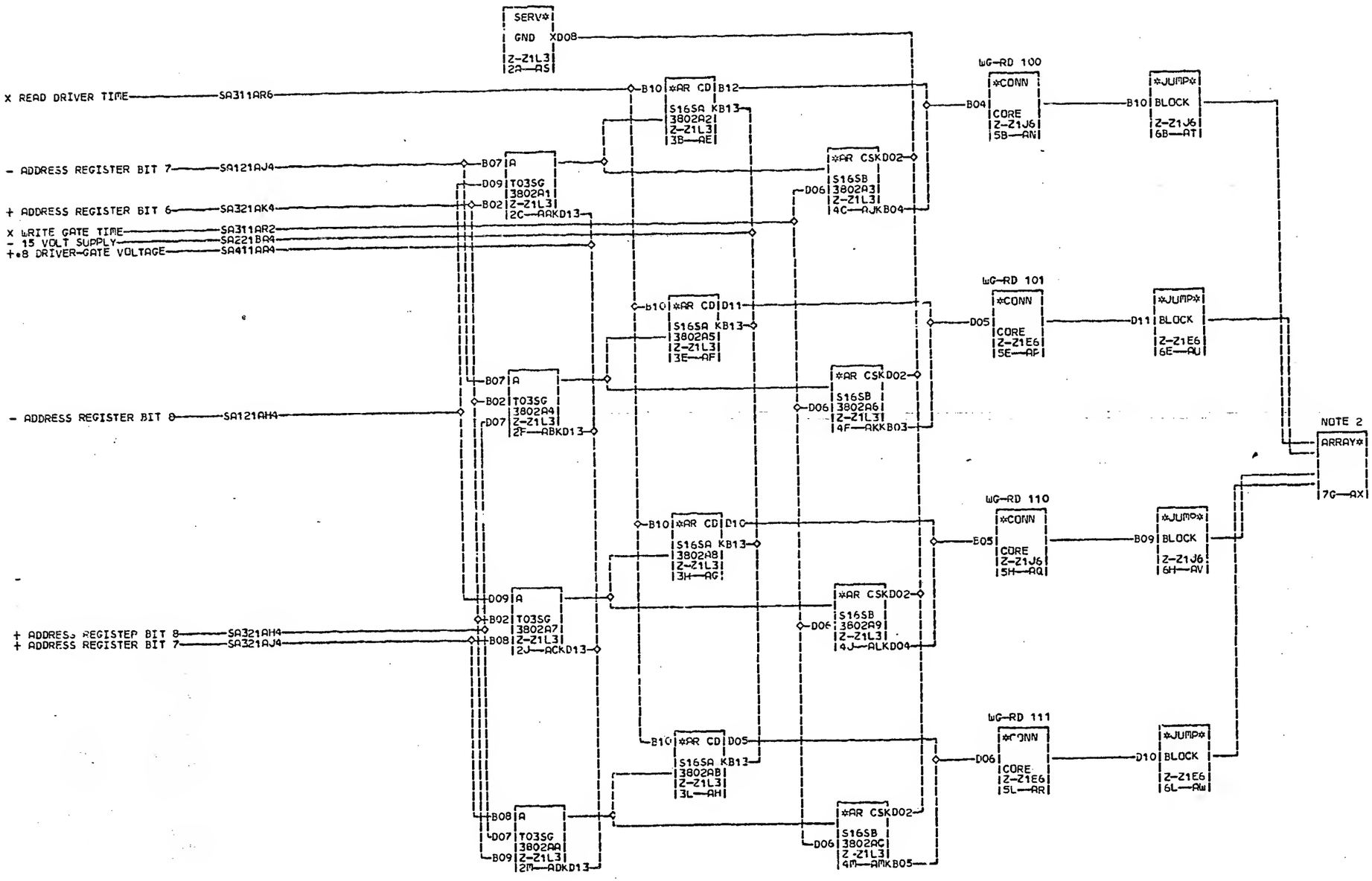

NOTE 1 FOR LOCATION OF Z-Z1 REFER TO PAGE WZ01
NOTE 2 REFER TO SA0710 SA0720 SA0810 AND SA082 FOR CONNECTIONS TO ARRAY BOTTOM AND DIODE BOARDS.

000

02-13-65 414250
05-14-65 414252
10-11-65 414258
12-22-66 730246

39

X HALF SELECT DRIVE LOW ORDER WRITE GATE AND READ DRIVER
DATE 01-20-67 MACH. SJ-2
LOG 002 FRAME 63
P.N. 2196740
IBM CORP. SMD BLK. AV

000

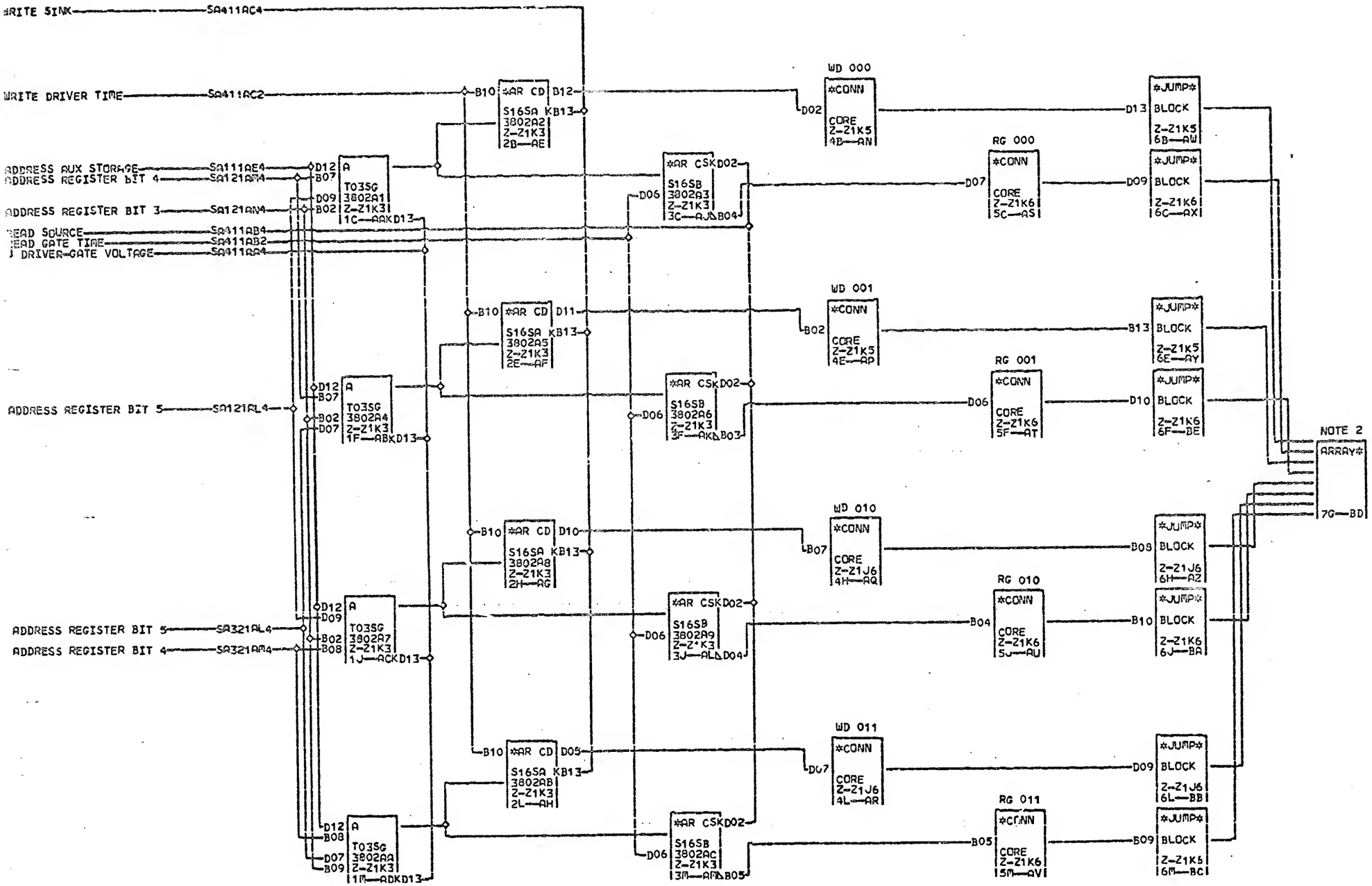

NOTE 1 FOR LOCATION OF Z-Z1 REFER TO PAGE WZ011

NOTE 2 REFER TO SA071◊ SA072◊ SA081◊ AND SA082 FOR CONNECTIONS TO ARRAY BOTTOM AND DIODE BOARDS.

02-13-65 414250
05-14-65 414252
10-11-65 414258

40

X HALF SELECT DRIVE HIGH ORDER
READ GATE AND WRITE DRIVER
DATE 07-12-66 MACH. SJ-2

LOG 295D FRAME 63

P.N. 2196741

IBM CORP. SDD BLK. BF

11

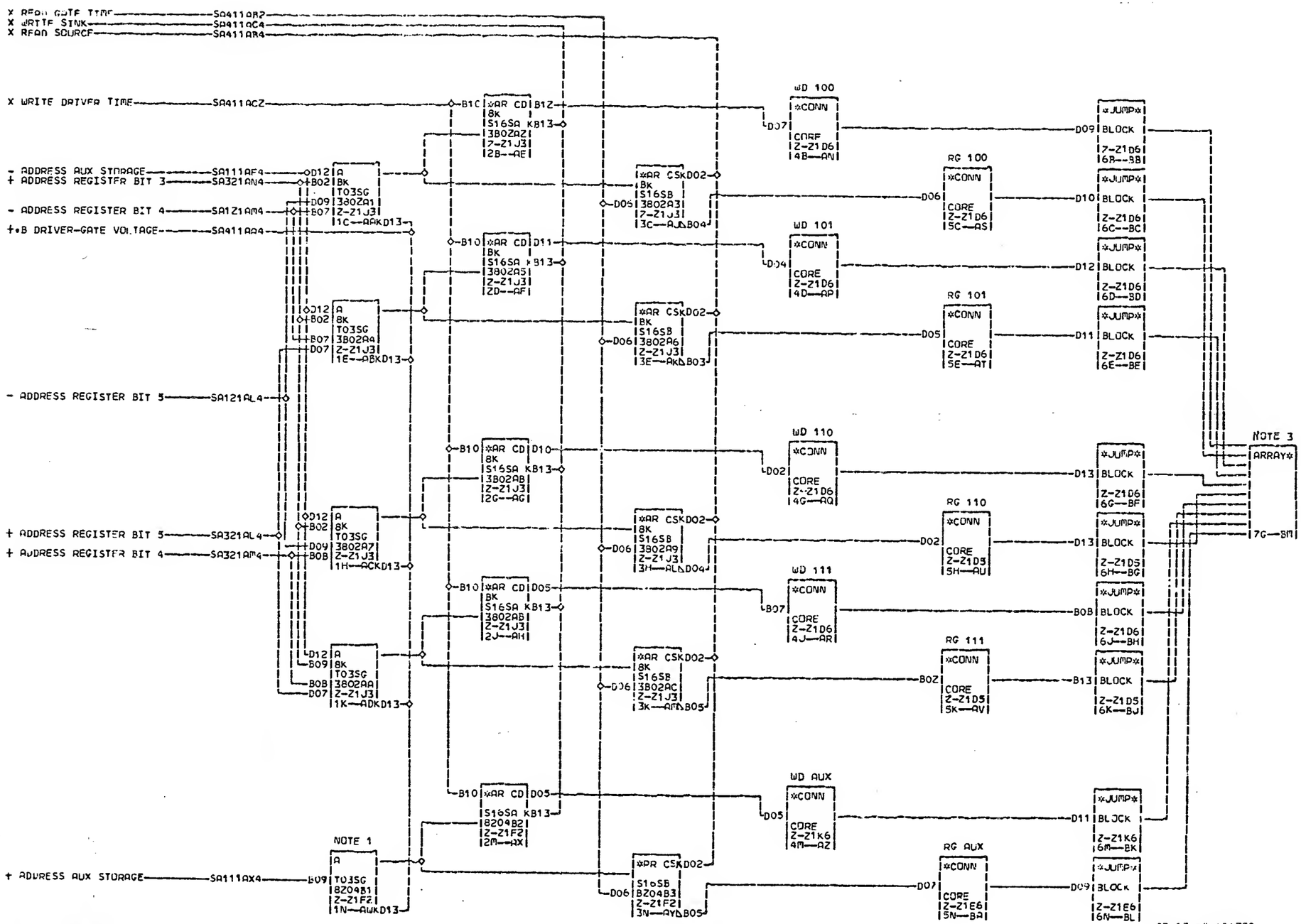

S NOTE 1 FOR LOCATION OF Z-Z1
A REFER TO PAGE WZ011
4 NOTE 2 REFER TO SA0710 SA0720
6 SA0810 AND SA0862 FOR
E CONNECTIONS TO ARRAY
BOTTOM AND LIDDE
000 BOARDS.

02-13-65 414250
05-14-65 414252
10-11-65 414258
09-05-67 731506

41

X HALF SELECT DRIVE HIGH ORDER READ GATE AND WRITE DRIVER		S A 4 6 6
DATE 09-12-67 MACH. SJ-2		
LOG 240Q FRAME 63		
P.N. 2196742		000
IBM CORP. SDD BLK. BN		

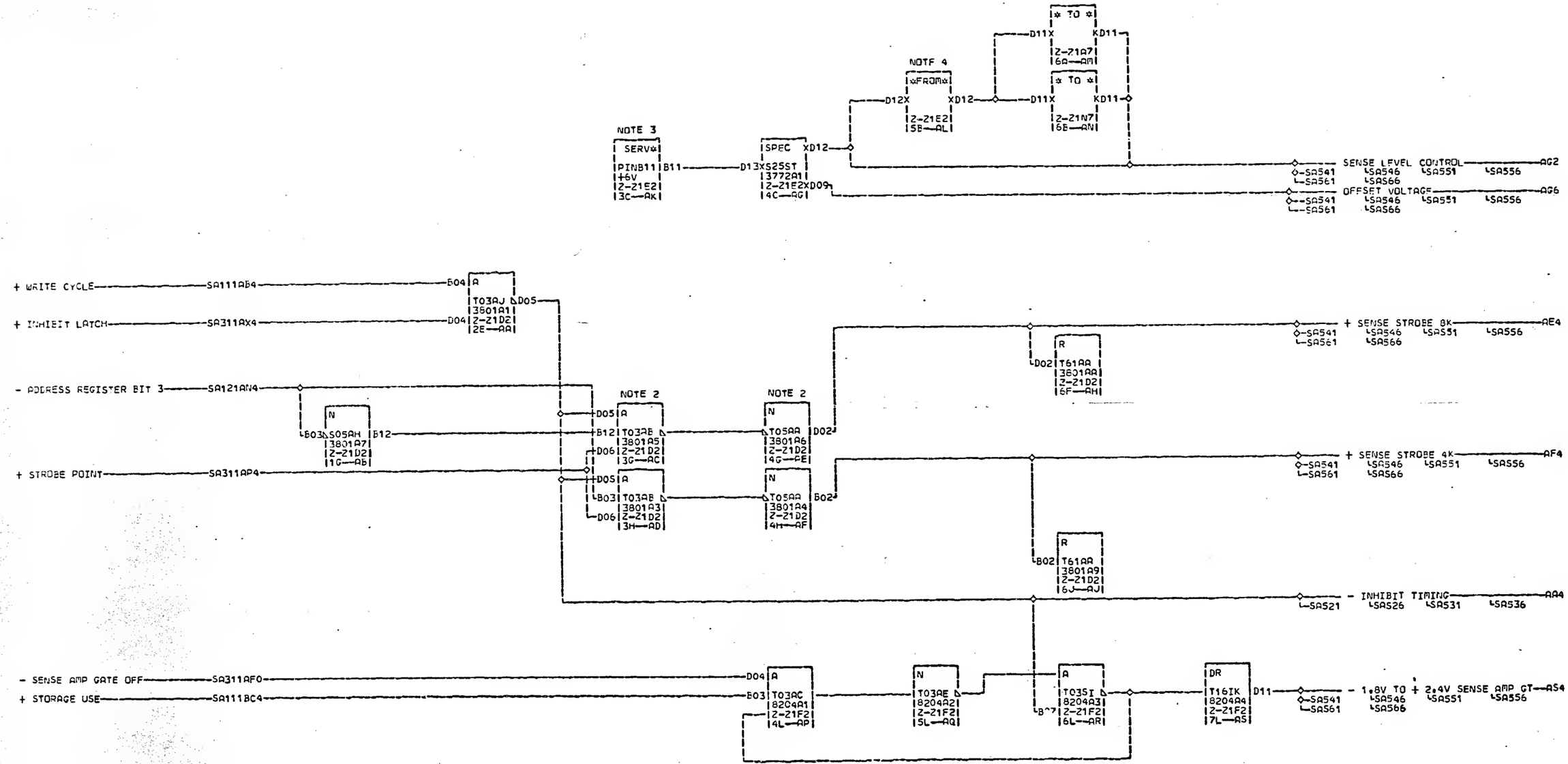

NOTE 1 FOR LOCATION OF Z-Z1 REFER TO PAGE WZ011

S NOTE 2 FOR STROBE ADJUSTMENT
A REFER TO SA022.
S
1 NOTE 3 REMOVE E2D13 TO E2B11
1 FOR 4K OPERATION.
NOTE 4 THESE JUMPERS ARE
J00 ADDED TO REDUCE VOLTAGE DROP.

02-13-65 414250
05-14-65 414252
10-11-65 414258
12-22-66 730246
09-05-67 731506

SENSE CONTROLS AND INHIBIT TIMING
DATE 09-12-67 MACH. SY-2
LOG 256E FRAME 63
P.N. 2196743
IBM CORP. SDD BLK. AT

S A S 1 1 000

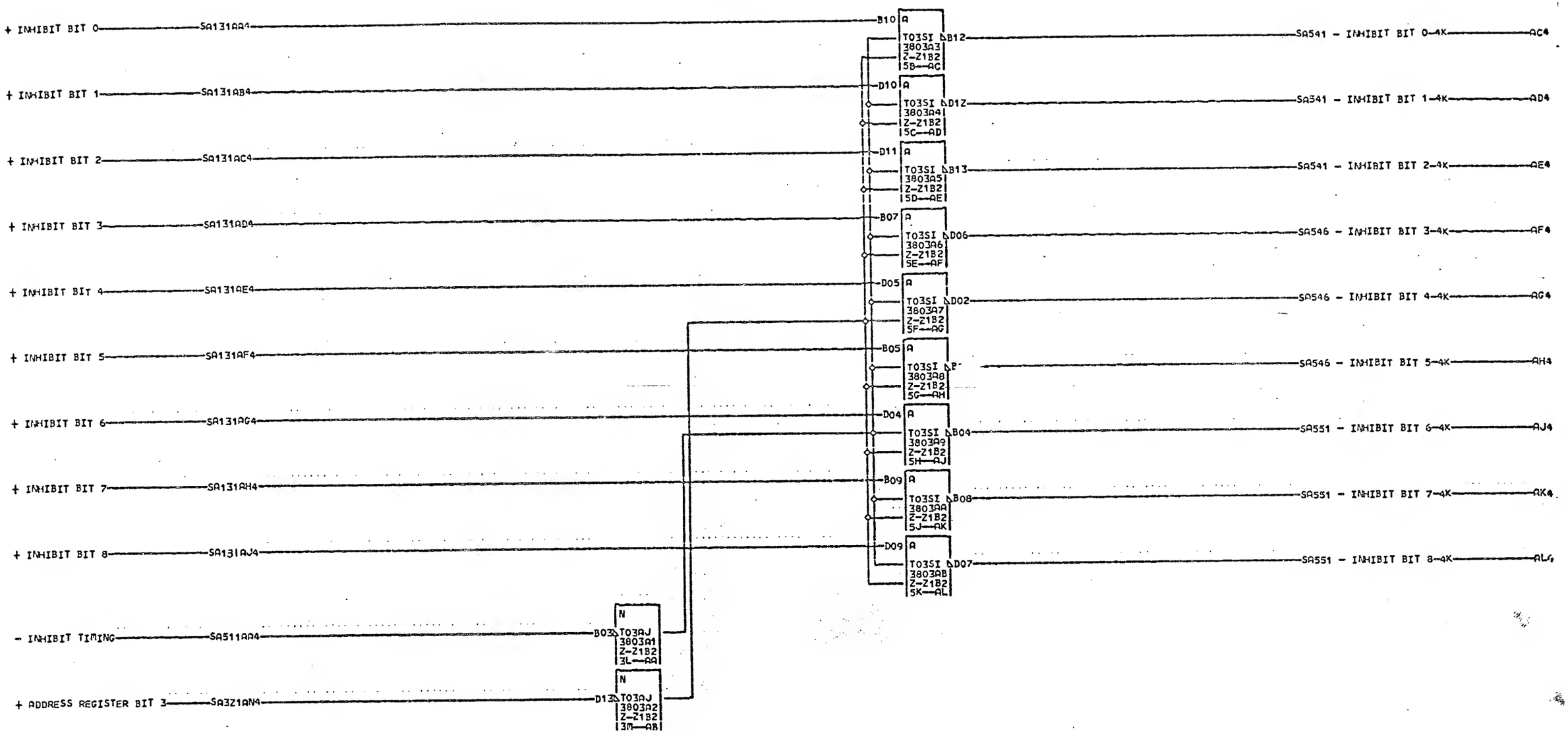

NOTE. FOR LOCATION OF Z-Z1
REFER TO PAGE 6Z011

SA5211 000

02-13-65 414250
05-14-65 414252
10-11-63 414258
03-07-66 256308

INHIBIT INVERTERS BITS 0 TO 8 4K			
DATE	07-12-66	FACH. 5J-2	
LOC	102	FRAME	63
		P.N.	2196744
IBM CORP.	SDD BLK.		AA

SA5211 000

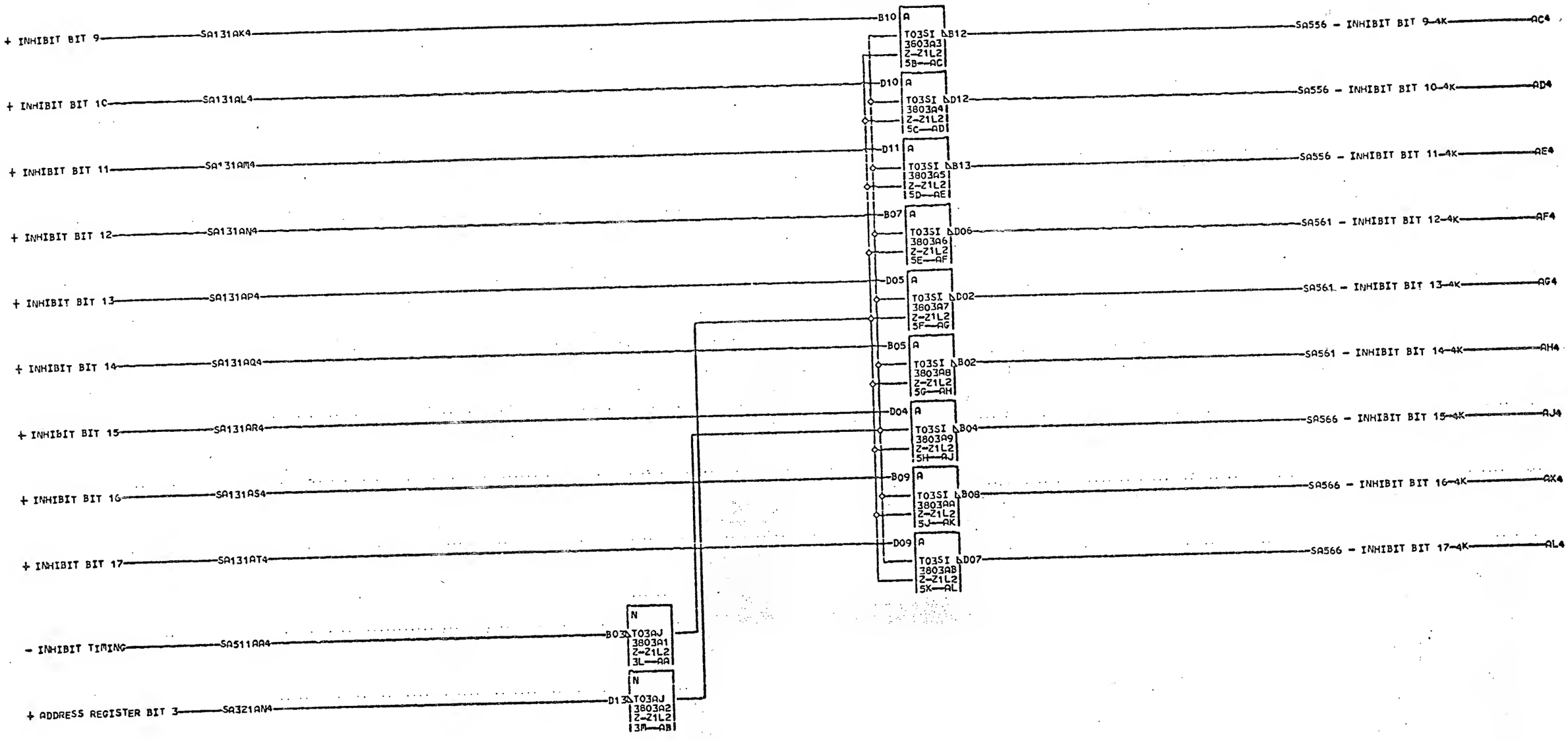

NOTE. FOR LOCATION OF Z-Z1
REFER TO PAGE WZ011

SA526
000

02-13-65 414250
05-14-65 414252
10-11-65 414258
03-07-66 256308

INHIBIT INVERTERS
BITS 9 TO 17 4K
DATE 07-12-66 MACH. SJ-2
LOG 102 FRAME 53
P.N. 2196745
IBM CORP. SDD BLK. A3

SA526
000

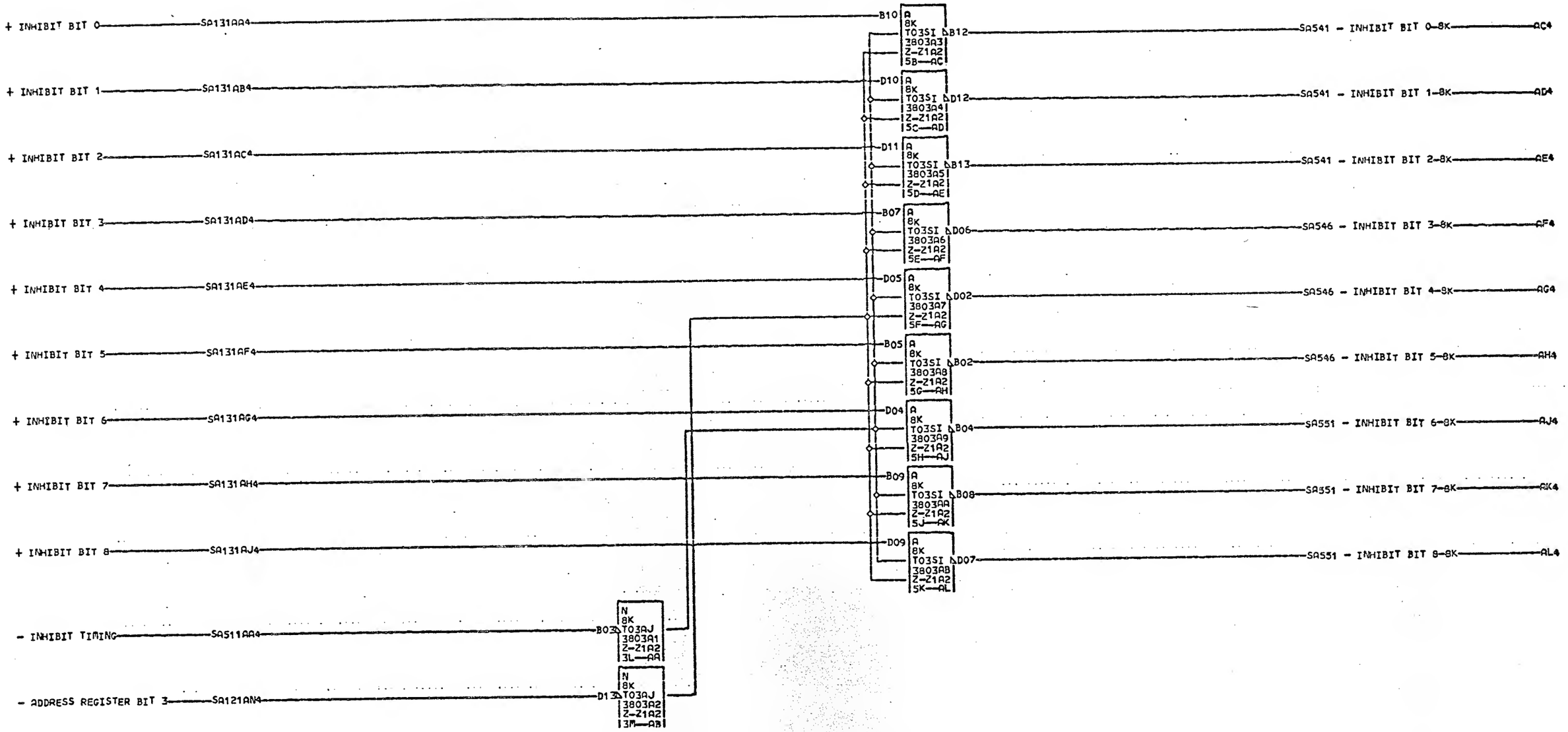

NOTE. FOR LOCATION OF Z-Z1
REFER TO PAGE WZ011

SA511
000

02-13-65 414250
05-14-65 414252
10-11-65 414258
03-07-66 256308

INHIBIT INVERTERS
BITS 0 TO 8 8K
DATE 07-12-66 MACH. SJ-2
LOG 102 FRAME 63
P.N. 2196746
IBM CORP. SDD BLK. AA

SA511
000

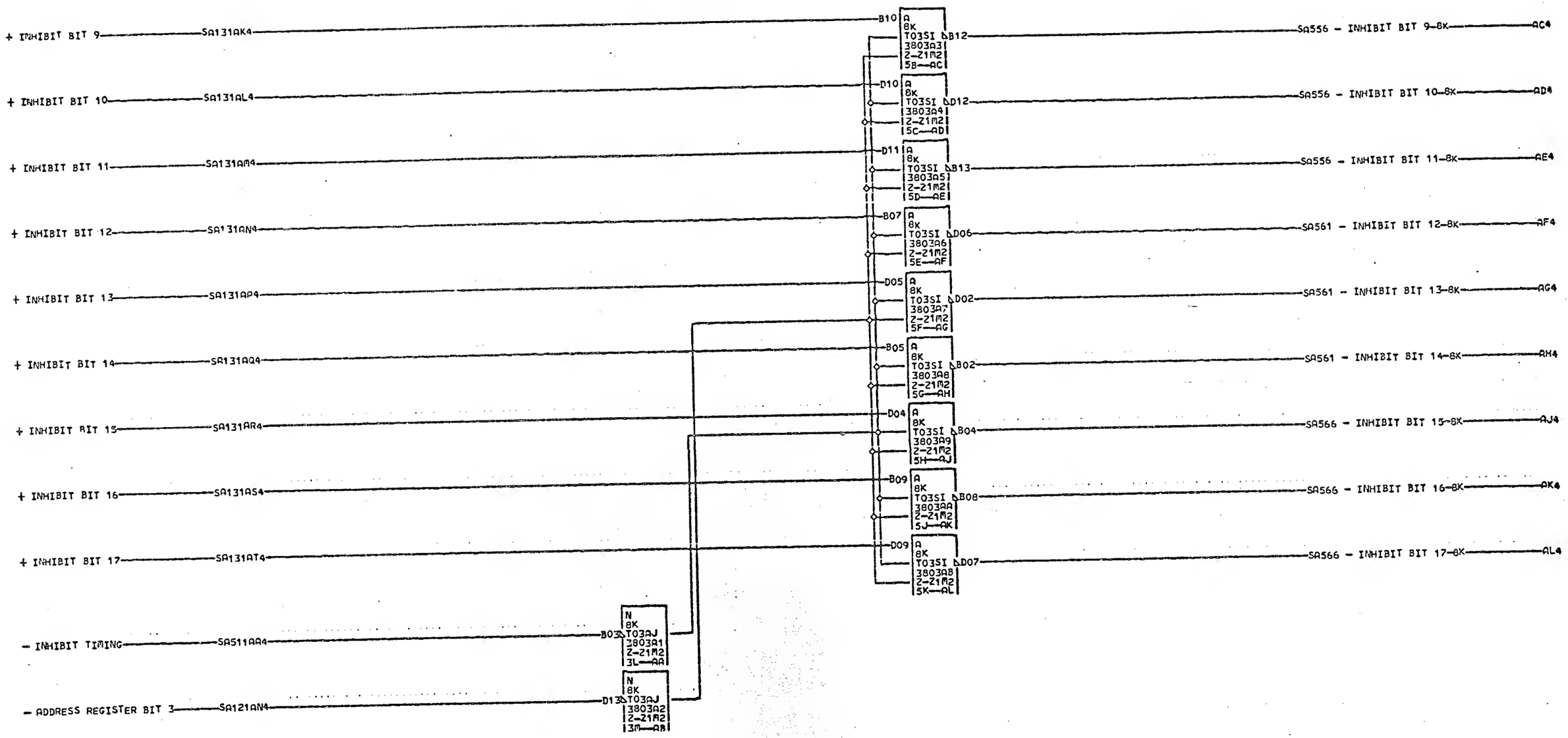

NOTE. FOR LOCATION OF Z-Z1
REFER TO PAGE W2011

02-13-65 414250
05-14-65 414252
10-11-65 414253
03-07-66 256300

INHIBIT INVERTERS
BITS 9 TO 17 8K
DATE 07-12-66 MACH. SJ-2
LOG 102 FRAME 63
P.N. 2196747
IBM CORP. SDD BLK. AA

SA536 000

SA536 000

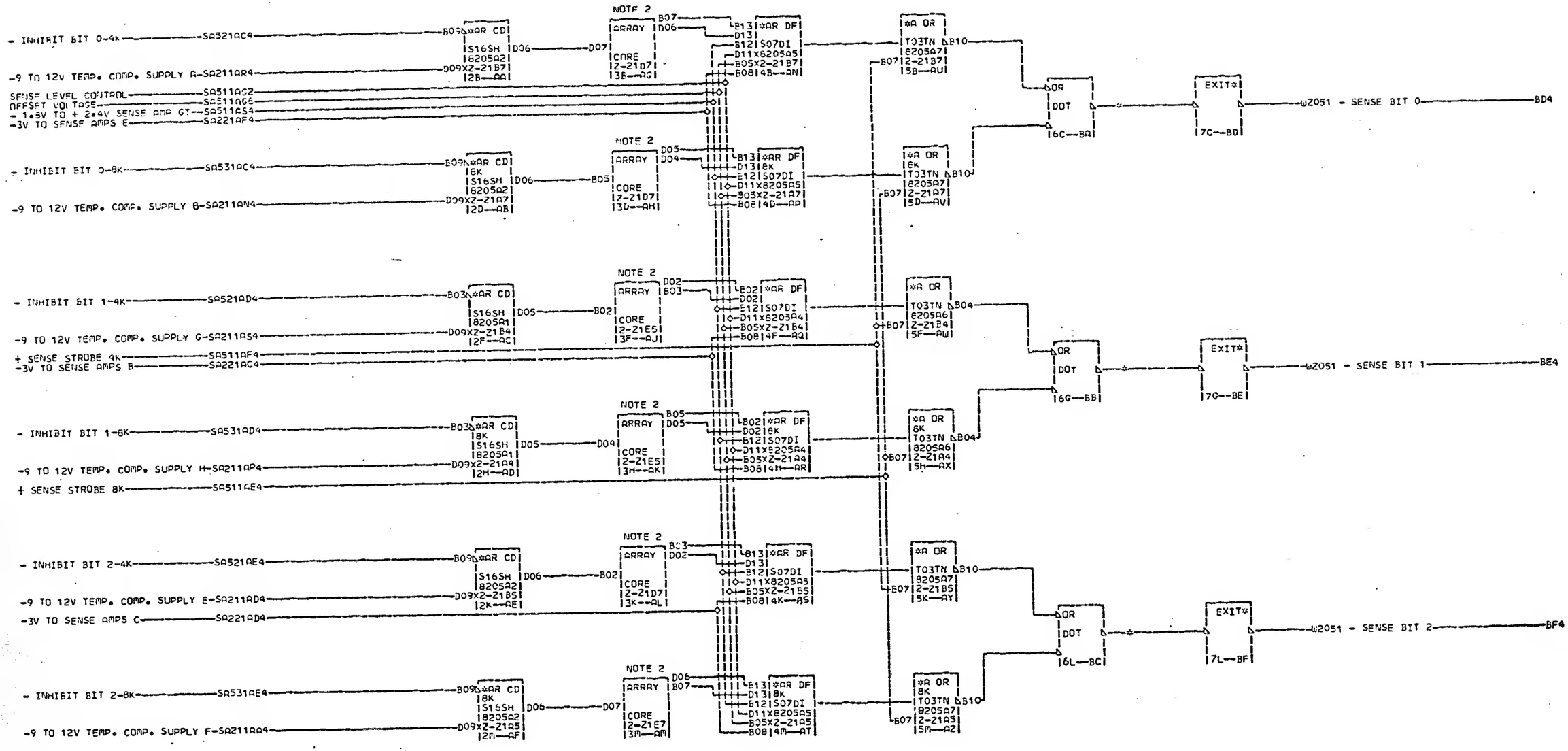

NOTE 1 FOR LOCATION OF Z-Z1 REFER TO PAGE W2011

NOTE 2 REFER TO SA061 AND SA062 FOR LOGIC TO ARRAY CONNECTIONS.

BA4	Z-Z1B1A11	
BB4	Z-Z1B1B11	
BC4	Z-Z1B1C11	

02-13-65	414250
05-14-65	414252
10-11-65	414258
03-07-66	256308
12-22-66	730246
09-05-67	731506

INHIBIT-SENSE BITS 0-1-2

DATE 09-12-67 MACH. SJ-2

LOG 248Q FRAME 63

P.N. 2196748

IBM CORP. SDD BLK. BG

SA541 000

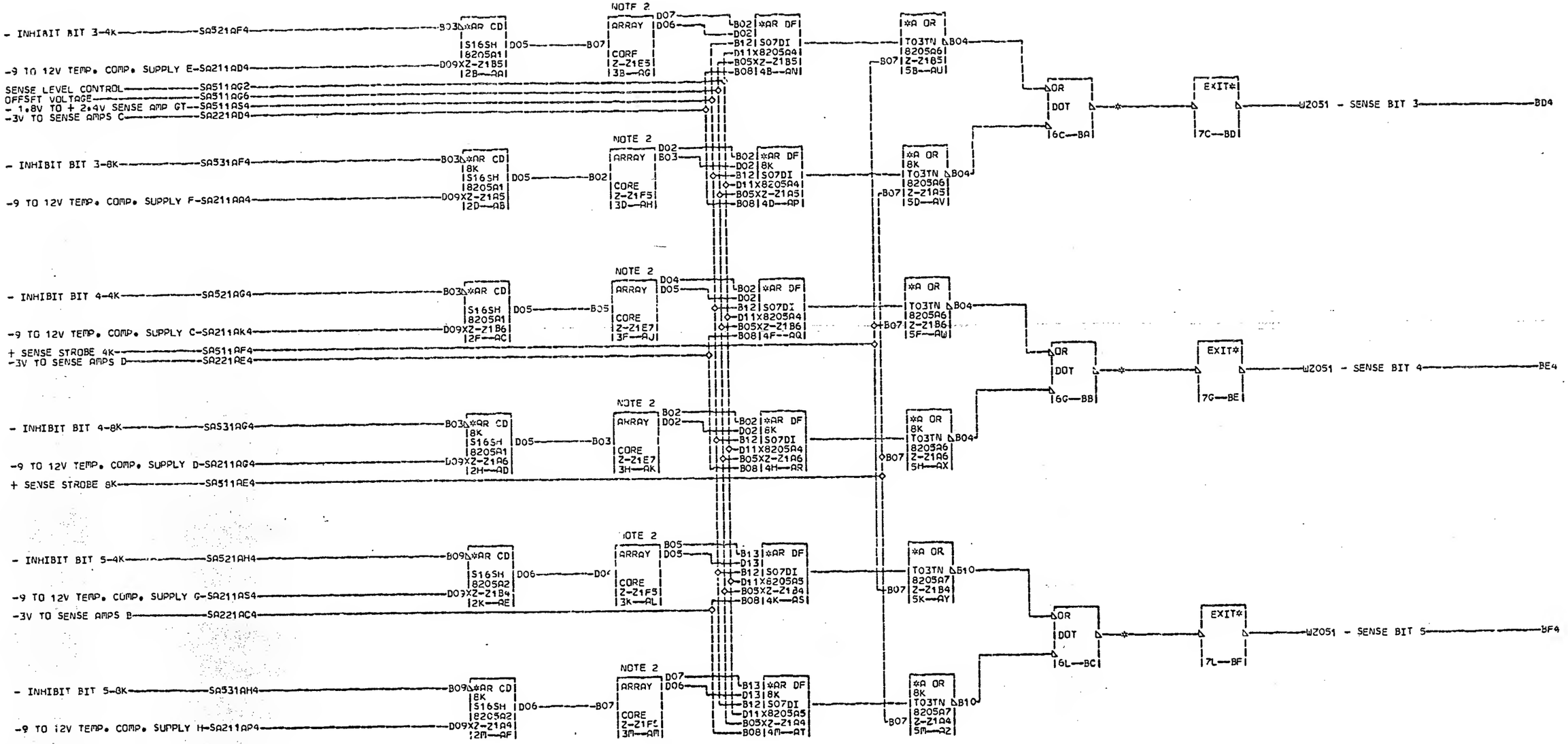

NOTE 1 FOR LOCATION OF Z-Z1 REFER TO PAGE WZ011

S NOTE 2 REFER TO SA061 AND SA062 FOR LOGIC TO ARRAY CONNECTIONS.

A 9 4 6

000

BA4 Z-Z1B1D11
63Z-Z1A1E11
BB4 Z-Z1B1E11
BC4 Z-Z1C1B11

02-13-65 414250
05-14-65 414252
10-11-65 414258
03-07-66 256308
12-22-66 730246
09-05-67 731506

48

INHIBIT-SENSE BITS 3-4-5

DATE 09-12-67 MACH. SJ-2

LOG 248Q FRAME 63

P.N 2196749

IBM CORP. SDD BLK. BG

S A 5 4 6 000

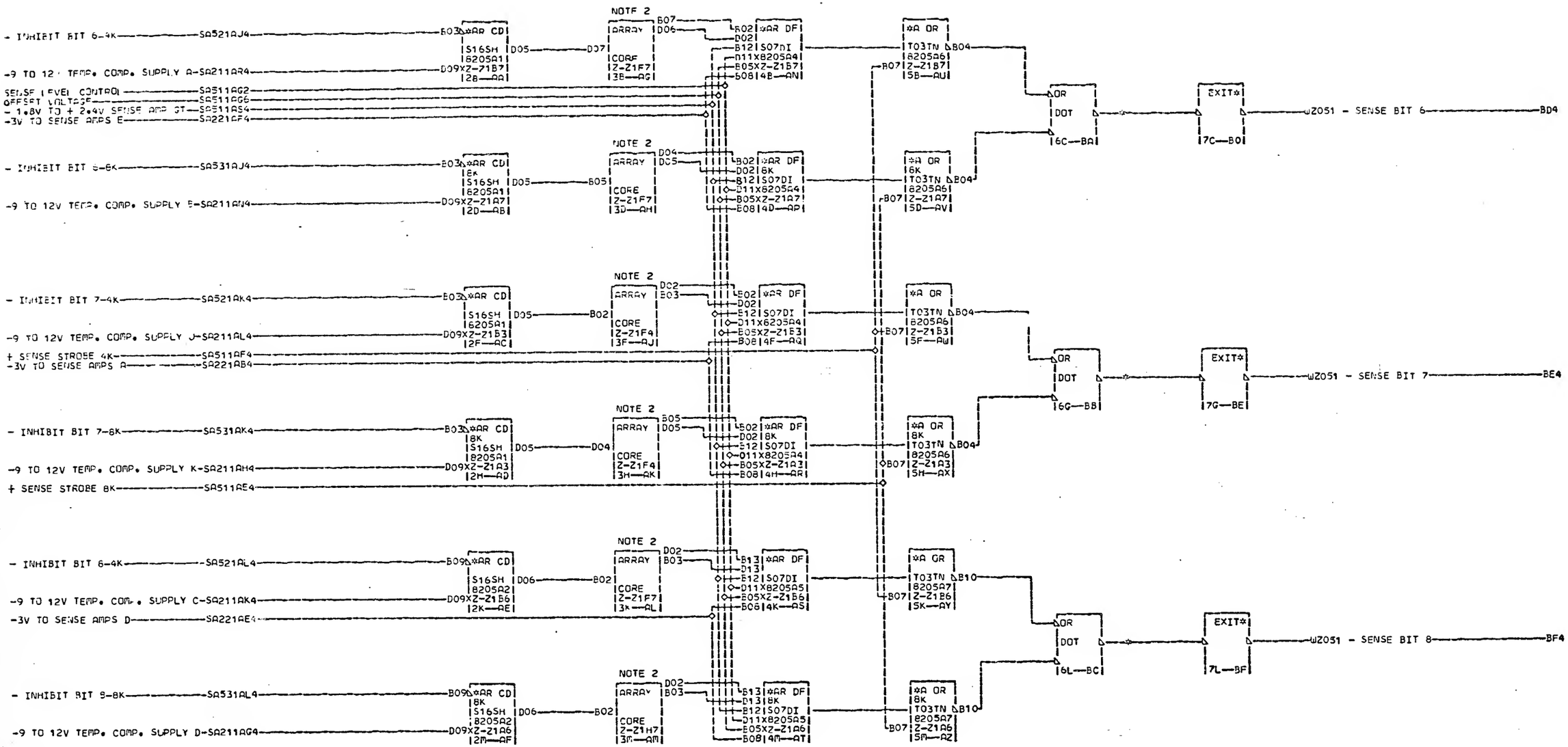

NOTE 1 FOR LOCATION OF Z-Z1 REFER TO PAGE WZ011

NOTE 2 REFER TO SA061 AND SA062 FOR LOGIC TO ARRAY CONNECTIONS.

BA4	Z-Z1C1C11
BB4	Z-Z1C1D11
63Z	Z-Z1C1A11
BC4	Z-Z1C1E11

02-13-65 414250
05-14-65 414252
10-11-65 414256
03-07-66 256308
12-22-66 730246
09-05-67 731306

INHIBIT-SENSE BITS 6-7-8

DATE 09-12-67 MACH. SJ-2

LOG 248Q FRAME 63

P.N. 2196750

IBM CORP. SDD BLK. BG

000

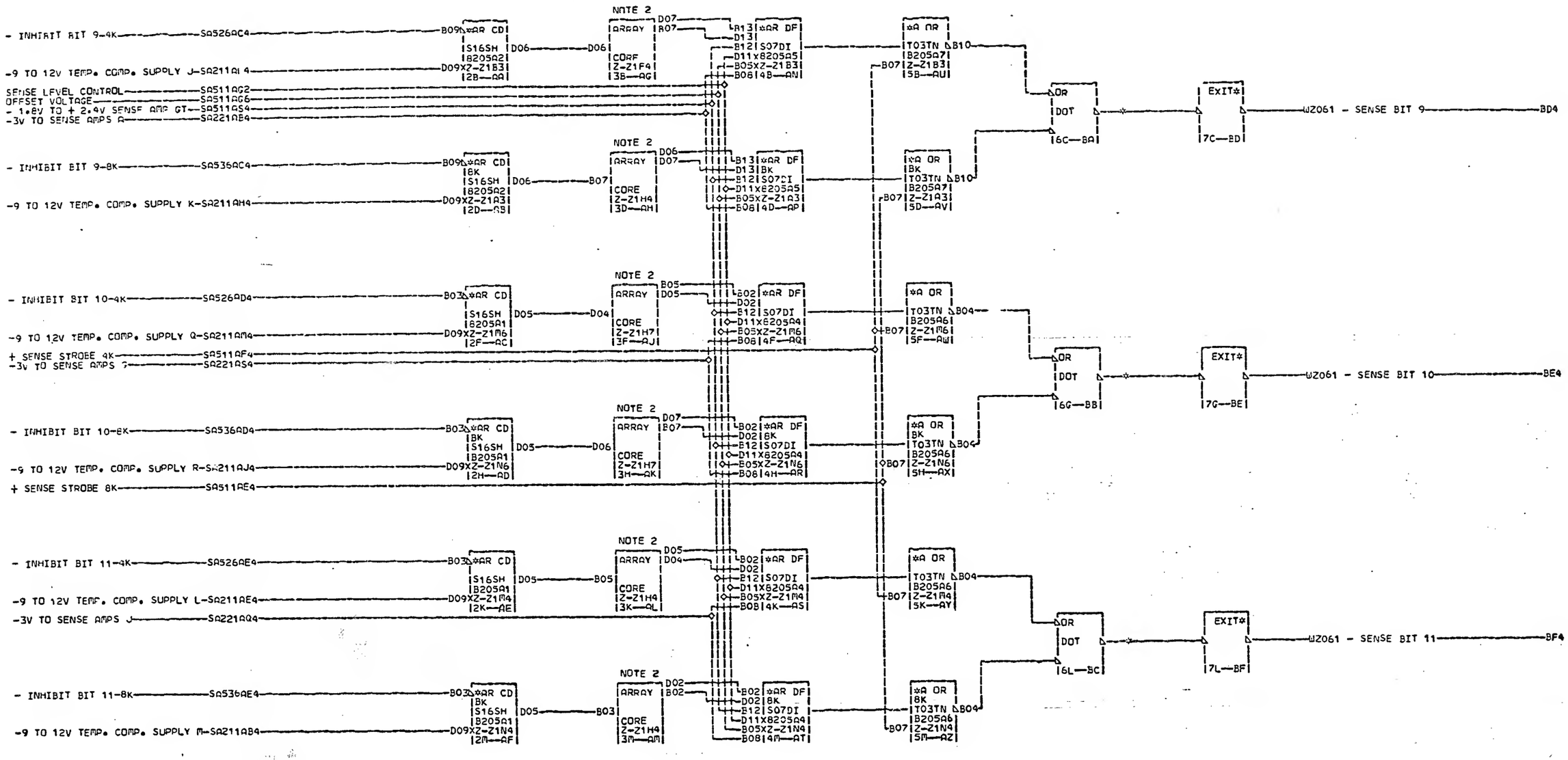

NOTE 1 FOR LOCATION OF Z-Z[illegible] REFER TO PAGE WZ011

S NOTE 2 REFER TO SA061 AND SA062 FOR LOGIC TO ARRAY CONNECTIONS.

BA4 Z-Z1D1A11
BB4 Z-Z1L1A11
BC4 Z-Z1L1B11

A 5 5 5 6

000

02-13-65 414250
05-14-65 414252
10-11-65 414258
03-07-66 256308
12-22-66 730246
09-05-67 731506

INHIBIT-SENSE
BITS 9-1C-11

DATE 09-12-67 MACH. SJ-2

LOG 24BQ FRAME 63

P.N. 2196751

IBM CORP. SDD BLK. BG

S A 5 5 6 000

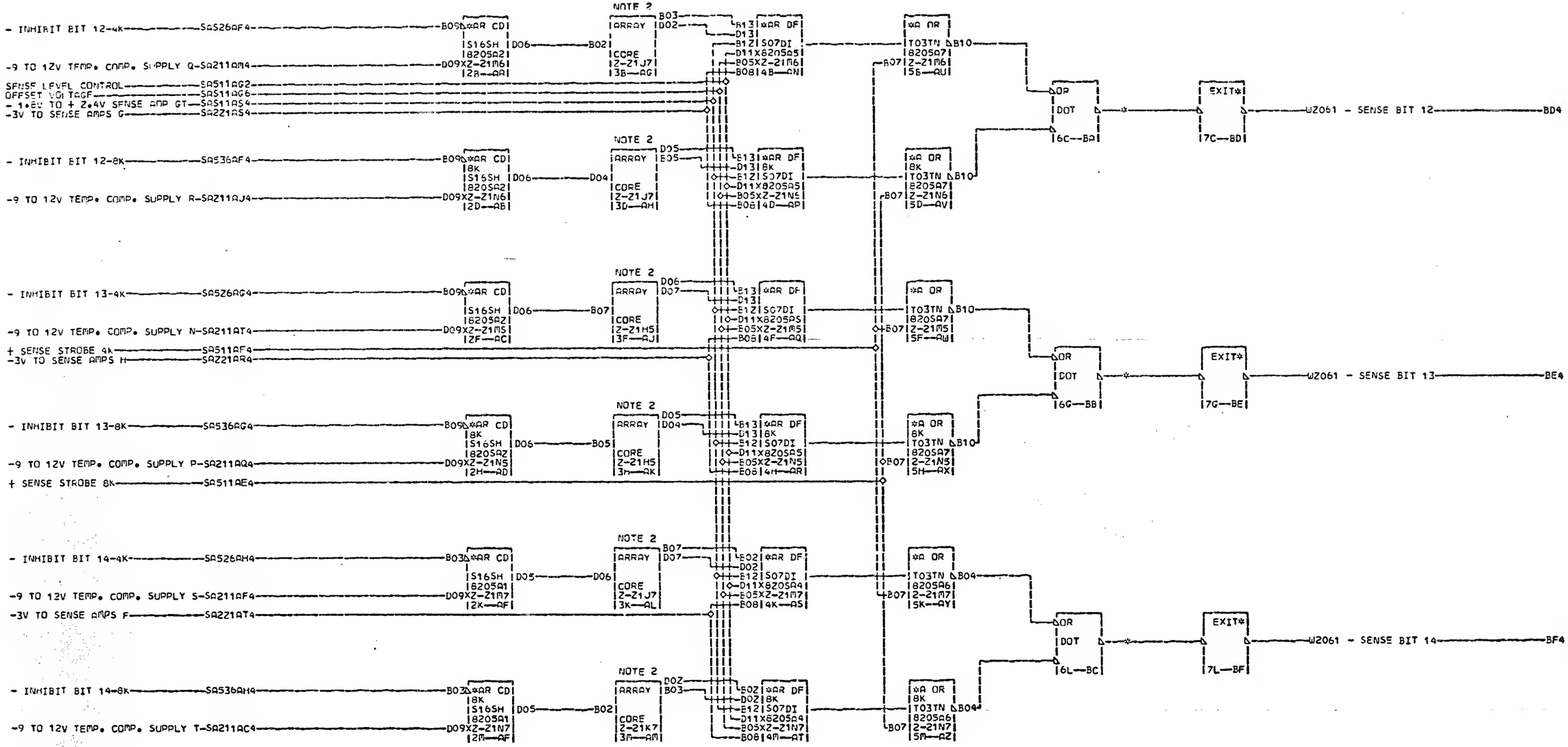

NOTE 1 FOR LOCATION OF Z-Z'
REFER TO PAGE WZ011

S NOTE 2 REFER TO SA061 AND
A SA062 FOR LOGIC TO
5 ARRAY CONNECTIONS.
6
1

000

BA4 Z-Z1L1C11
BB4 Z-Z1L1D11
63Z-Z1K1E11
BC4 Z-Z1L1E11

02-13-65 414250
05-14-65 414252
10-11-65 414258
03-07-66 256308
12-22-66 730246
09-05-67 731506

INHIBIT-SENSE
BITS 12-13-14
DATE 09-12-67 MACH. SJ-2
LOG 248Q FRAME 63
P.N. 2196752
IBM CORP. SDD BLK. BG

SA5561 000

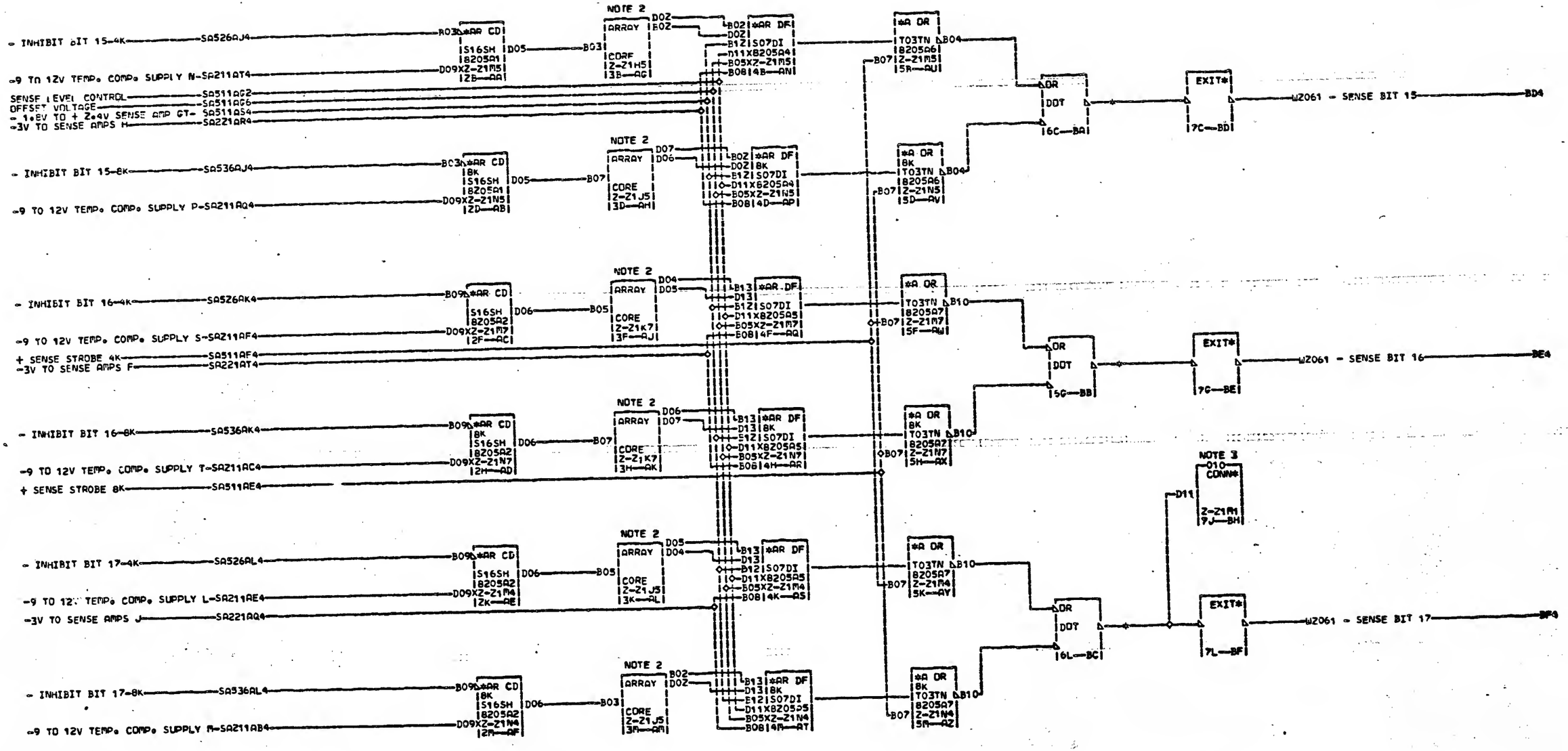

NOTE 1 FOR LOCATION OF Z-Z1 REFER TO PAGE WZ011

NOTE 2 REFER TO SA061 AND SA062 FOR LOGIC TO ARRAY CONNECTIONS.

NOTE 3 SYSTEM MAY REMOVE M4B10 TO M1D11 REFER TO WZ061

BA4 Z-Z1M1B11
BB4 Z-Z1M1C11
BC4 Z-Z1M1A11
632-Z1M1D11

010
SIM TO PN 2196753 EC 731505

	INHIBIT-SENSE BITS 15-16-17
DATE	09-06-67 MACH. SJ-2
LOG	249R FRAME 63
	P.N. 2910236
IBM CORP.	SMD BLK. SA

010